Accessory Design Guidelines for Apple Devices

Release R14

Contents

1. Overview 13

1. Introduction 14

2. Requirements 15

3. Terminology 16
- 3.1 Device 16
- 3.2 Accessory 16
- 3.3 Captured Cable 16
- 3.4 Accessory Interface Specification 16

2. Accessories 17

4. All Accessories 18
- 4.1 Compliance Testing 18
- 4.2 Integrated USB Receptacles 18
- 4.3 User Supplied Cables and AC Power Adapters 18
- 4.4 Attachments 19
- 4.5 Magnetic Interference 19
- 4.6 Radio Frequency (RF) Performance 20
  - 4.6.1 Materials and Coatings 20
  - 4.6.2 Antenna Keep-Out 21
  - 4.6.3 Over The Air (OTA) Transmission/Reception 21
  - 4.6.4 Specific Absorption Rate (SAR) 21
  - 4.6.5 Near Field Communication (NFC) 21
- 4.7 Thermal Management 22
- 4.8 Tripod Connections 22

5. Cases 23
- 5.1 Product Design 23
  - 5.1.1 Device Protection 23
  - 5.1.2 Access to Inputs and Interconnects 24

Copyright © 2021 Apple Inc. All Rights Reserved.

5.1.3 Dock Compatibility 27
5.1.4 Wireless Power and Rear Pockets 27
5.2 Acoustics 28
5.2.1 Call Quality 28
5.2.2 Speaker to Microphone Coupling 28
5.2.3 Speaker/Microphone Openings 28
5.3 Ambient Light Sensor and Proximity Sensor Interference 31
5.4 Taptic Engine 31
5.5 Magnetic Interference 31
5.6 Home Button / Touch ID Sensor 32
5.7 Camera 32
5.7.1 Geometry 32
5.7.2 Color 33
5.7.3 Surface Finish 33
5.7.4 Image Degradation Examples 33
5.8 Reliability 34
5.8.1 Device Insertion and Removal 34
5.8.2 Colorfastness 34
5.9 Environmental 34
5.10 Test Procedures 35
5.10.1 Device Models 35
5.10.2 Product Design 44
5.10.3 Taptic Engine 46
5.10.4 Home Button / Touch ID Sensor Overlays 46
5.10.5 Acoustics 47

6. Covers 50
6.1 Magnetic Interference 50
6.2 Smart Covers 50

7. Screen Overlays 52
7.1 Product Design 52
7.2 Edge Swipe and Edge Press Gestures 52

8. Camera Attachments 53
8.1 Magnetic Interference 53

9. Adapters 54
9.1 Headset Adapters (Lightning to 3.5 mm) 54
9.2 USB-A/USB-C to Lightning Headset Adapters 54

2021-04-23 | Copyright © 2021 Apple Inc. All Rights Reserved.

9.3 Ethernet Adapters (Lightning to RJ45) 54
9.4 Lightning to USB Micro-B Adapters 55

10. AC Power Adapters 56
10.1 Converter Switching Frequencies 56
10.2 YCAP AC Capacitor 56
10.3 Impedance Stability 56
10.4 Fuse Protection 57
10.5 Short Circuit Response 58

11. Battery Packs 59

12. Strobes 60

13. AirPods Accessories 62
13.1 Charging Case Covers 62
13.2 Chargers 62

14. Watch Bands 63
14.1 Requirements 63
14.2 Apple Watch Band Interface 65
14.3 Example Apple Watch Lug Assembly 66
14.4 Example Apple Watch Lug 68

3. Features 69

15. Bluetooth Accessory Identification 70
15.1 HFP Command AT+XAPL 70

16. Accessory Power (Lightning) 72

17. App Discovery 73

18. App Launch 74

19. App Match 75

20. Bluetooth Headset Battery Level Indication 77
20.1 HFP Command AT+IPHONEACCEV 77

Copyright © 2021 Apple Inc. All Rights Reserved.

21. Device Power (Lightning) 78
21.1 Direct Power Source 78
21.2 External Power Source 78
21.3 Declaring Capability 79
21.4 Providing Power via USB Connectors 79
21.5 Labeling Multiple Connectors 80
21.6 Fast Charge for iPhone (20 W) 80
21.7 Overcurrent and Short Circuit Protection 81
21.8 Overcurrent and Short Circuit Protection Resets 82
21.9 Power State Changes 82

22. Device Power (Inductive) 83
22.1 Qi Wireless Power 83
22.2 Electromagnetic Compatibility (EMC) 83

23. Location Information 86

24. MagSafe Attach 87
24.1 MagSafe Case Magnet Array 88
24.1.1 Product Design 88
24.1.2 Mechanical 88
24.1.3 Magnetic Interference 94
24.2 MagSafe Accessory Magnet Array 95
24.2.1 Product Design 95
24.2.2 Mechanical 95
24.3 Test Procedures 101
24.3.1 MagSafe Case Magnet Array 101

25. Media Library Access 105

26. Now Playing Updates 106

27. Out-of-Band Bluetooth Pairing 107

28. Siri 108
28.1 Enabling Custom Siri Commands 108
28.2 Obtaining Siri Availability Information 108
28.2.1 Obtaining Status Information at Connection 108
28.2.2 Receiving Siri Availability Updates from the Device 109
28.3 Initiating a Siri Session 110

2021-04-23 | Copyright © 2021 Apple Inc. All Rights Reserved.

28.3.1 Initiating a Session from the Accessory 110
28.3.2 Initiating a Session from the Device 111
28.3.3 Ending a Session from the Accessory 112
28.4 Siri Eyes Free Mode 112
28.4.1 HFP Command AT+APLEFM 113
28.5 Improving Voice Recognition 113
28.5.1 Wide Band Speech Support 114
28.6 Optimizing the Siri Experience 114
28.7 Common Siri Applications 115
28.7.1 Initialization Procedure After Connection is Established 115
28.7.2 Phone Dialing Using Siri 116
28.7.3 Audio Routing and Media Playback Using Siri 116
28.7.4 Turn-By-Turn Directions Using Siri 117
28.8 User Interaction with Siri Eyes Free in a Vehicle 117
28.9 Enabling/Disabling Siri from the Device 119
28.10 Test Procedures 120
28.10.1 Siri Eyes Free 120

29. Wi-Fi Information Sharing 125

4. Protocols 126

30. USB Power Capability Vendor Request 127

31. USB D+/D- Resistor Networks 128
31.1 Declaring Power Source Capability 128
31.2 Identifying Power Source Current Limit 129

32. USB Power Delivery 131

33. USB-C Current 132

34. Advanced Audio Distribution Profile (A2DP) 133
34.1 Bluetooth A2DP Specification 133
34.1.1 AVDTP Transactions 133
34.2 SubBand Codec (SBC) 133
34.3 MPEG 2/4 AAC Codecs 134
34.4 Test Procedures 135
34.4.1 Audio Quality 135

Copyright © 2021 Apple Inc. All Rights Reserved.

34.4.2 Audio Switching 135
34.4.3 HFP Interaction 135
34.4.4 Siri 136
34.4.5 Video Playback 136

35. iAP2 137

5. Transports 138

36. Bluetooth 139
36.1 Enhanced Data Rate 139
36.2 Adaptive Frequency Hopping 139
36.3 Sniff Mode for Low Power Consumption 139
36.4 Role and Topology Management 140
36.5 Extended Inquiry Response 141
36.6 Secure Simple Pairing 141
36.7 Pairing Button 142
36.8 Class of Device (CoD) 142
36.9 Link Supervision Timeout 142
36.10 Delay Reporting 142
36.11 Profiles 143
36.11.1 Device ID Profile (DID) 143
36.11.2 Service Discovery Protocol (SDP) 143
36.11.3 Hands-Free Profile (HFP) 144
36.11.4 Message Access Profile (MAP) 146
36.11.5 Audio/Video Remote Control Profile (AVRCP) 146
36.11.6 Advanced Audio Distribution Profile (A2DP) 148
36.12 Audio Routing 148
36.12.1 Audio Data Received via HFP Profile 149
36.12.2 Audio Data Received via A2DP Profile 149
36.13 HID 151

37. Bluetooth Low Energy (BLE) 152
37.1 Role 152
37.2 Advertising Channels 152
37.3 Advertising PDU 152
37.4 Advertising Data 152
37.5 Advertising Interval 153
37.6 Connection Parameters 154

Copyright © 2021 Apple Inc. All Rights Reserved.

37.7 Data Packet Length Extension 154
37.8 Privacy 155
37.9 Permissions 155
37.10 Pairing 155
37.11 MTU Size 156
37.12 Services 156
37.12.1 Generic Access Profile Service 156
37.12.2 Generic Attribute Profile Service 156
37.12.3 Device Information Service 157
37.12.4 Available Services 157
37.13 GATT Server 157

6. Connectors 159

38. USB-A Receptacle 160
38.1 Mechanical 160
38.2 Electrical 160

39. USB-C Plug 161
39.1 Mechanical 161
39.2 Electrical 161
39.3 Test Procedures 162
39.3.1 Connector Test ID 162
39.3.2 Drawing Power 162

40. USB-C Receptacle 163
40.1 Mechanical 163
40.2 Electrical 163
40.2.1 Drawing Power 163
40.2.2 Providing Power 164
40.3 Test Procedures 164
40.3.1 Connector Test ID 164
40.3.2 Drawing Power 164
40.3.3 Providing Power 165

7. References 166

41. Device Dimensional Drawings 167

Copyright © 2021 Apple Inc. All Rights Reserved.

41.1 iPhone 12 Pro Max 1 of 2 171
41.2 iPhone 12 Pro Max 2 of 2 172
41.3 iPhone 12 Pro 1 of 2 173
41.4 iPhone 12 Pro 2 of 2 174
41.5 iPhone 12 1 of 2 175
41.6 iPhone 12 2 of 2 176
41.7 iPhone 12 mini 1 of 2 177
41.8 iPhone 12 mini 2 of 2 178
41.9 iPhone SE (2nd generation) 179
41.10 iPhone 11 Pro Max 180
41.11 iPhone 11 Pro 181
41.12 iPhone 11 182
41.13 iPhone XS Max 183
41.14 iPhone XS 184
41.15 iPhone XR 185
41.16 iPhone X 186
41.17 iPhone 8 Plus 187
41.18 iPhone 8 188
41.19 iPhone 7 Plus 189
41.20 iPhone 7 190
41.21 iPhone 6s Plus 191
41.22 iPhone 6s 192
41.23 iPhone 6 Plus 193
41.24 iPhone 6 194
41.25 iPhone 5s & iPhone SE 195
41.26 iPhone 5c 196
41.27 iPhone 5 197
41.28 iPad Pro (12.9-inch) 5th Generation 1 of 5 198
41.29 iPad Pro (12.9-inch) 5th Generation 2 of 5 199
41.30 iPad Pro (12.9-inch) 5th Generation 3 of 5 200
41.31 iPad Pro (12.9-inch) 5th Generation 4 of 5 201
41.32 iPad Pro (12.9-inch) 5th Generation 5 of 5 202
41.33 iPad Pro (11-inch) 3rd Generation 1 of 5 203
41.34 iPad Pro (11-inch) 3rd Generation 2 of 5 204
41.35 iPad Pro (11-inch) 3rd Generation 3 of 5 205
41.36 iPad Pro (11-inch) 3rd Generation 4 of 5 206
41.37 iPad Pro (11-inch) 3rd Generation 5 of 5 207
41.38 iPad Air (4th generation) 1 of 5 208
41.39 iPad Air (4th generation) 2 of 5 209

2021-04-23 | Copyright © 2021 Apple Inc. All Rights Reserved.

41.40 iPad Air (4th generation) 3 of 5 210
41.41 iPad Air (4th generation) 4 of 5 211
41.42 iPad Air (4th generation) 5 of 5 212
41.43 iPad Pro (12.9-inch) 4th Generation 1 of 5 213
41.44 iPad Pro (12.9-inch) 4th Generation 2 of 5 214
41.45 iPad Pro (12.9-inch) 4th Generation 3 of 5 215
41.46 iPad Pro (12.9-inch) 4th Generation 4 of 5 216
41.47 iPad Pro (12.9-inch) 4th Generation 5 of 5 217
41.48 iPad Pro (11-inch) 2nd Generation 1 of 5 218
41.49 iPad Pro (11-inch) 2nd Generation 2 of 5 219
41.50 iPad Pro (11-inch) 2nd Generation 3 of 5 220
41.51 iPad Pro (11-inch) 2nd Generation 4 of 5 221
41.52 iPad Pro (11-inch) 2nd Generation 5 of 5 222
41.53 iPad (7th generation) & iPad (8th generation) 1 of 3 223
41.54 iPad (7th generation) & iPad (8th generation) 2 of 3 224
41.55 iPad (7th generation) & iPad (8th generation) 3 of 3 225
41.56 iPad Air (3rd generation) with Wi-Fi 1 of 3 226
41.57 iPad Air (3rd generation) with Wi-Fi 2 of 3 227
41.58 iPad Air (3rd generation) with Wi-Fi 3 of 3 228
41.59 iPad Air (3rd generation) with Wi-Fi + Cellular 1 of 3 229
41.60 iPad Air (3rd generation) with Wi-Fi + Cellular 2 of 3 230
41.61 iPad Air (3rd generation) with Wi-Fi + Cellular 3 of 3 231
41.62 iPad mini (5th generation) with Wi-Fi 1 of 3 232
41.63 iPad mini (5th generation) with Wi-Fi 2 of 3 233
41.64 iPad mini (5th generation) with Wi-Fi 3 of 3 234
41.65 iPad mini (5th generation) with Wi-Fi + Cellular 1 of 3 235
41.66 iPad mini (5th generation) with Wi-Fi + Cellular 2 of 3 236
41.67 iPad mini (5th generation) with Wi-Fi + Cellular 3 of 3 237
41.68 iPad Pro (12.9-inch) 3rd Generation 1 of 3 238
41.69 iPad Pro (12.9-inch) 3rd Generation 2 of 3 239
41.70 iPad Pro (12.9-inch) 3rd Generation 3 of 3 240
41.71 iPad Pro (11-inch) 1 of 3 241
41.72 iPad Pro (11-inch) 2 of 3 242
41.73 iPad Pro (11-inch) 3 of 3 243
41.74 iPad Pro (12.9-inch) 2nd Generation with Wi-Fi 244
41.75 iPad Pro (12.9-inch) 2nd Generation with Wi-Fi + Cellular 245
41.76 iPad Pro (12.9-inch) 2nd Generation Magnet/Hall Effect Sensors 1 of 2 246
41.77 iPad Pro (12.9-inch) 2nd Generation Magnet/Hall Effect Sensors 2 of 2 247
41.78 iPad Pro (10.5-inch) with Wi-Fi 248

2021-04-23 | Copyright © 2021 Apple Inc. All Rights Reserved.

41.79 iPad Pro (10.5-inch) with Wi-Fi + Cellular 249
41.80 iPad Pro (10.5-inch) Magnet/Hall Effect Sensors 1 of 2 250
41.81 iPad Pro (10.5-inch) Magnet/Hall Effect Sensors 2 of 2 251
41.82 iPad (5th and 6th generation) with Wi-Fi + Cellular 252
41.83 iPad (5th and 6th generation) Magnet/Hall Effect Sensors 1 of 2 253
41.84 iPad (5th and 6th generation) Magnet/Hall Effect Sensors 2 of 2 254
41.85 iPad Pro (9.7-inch) with Wi-Fi 255
41.86 iPad Pro (9.7-inch) with Wi-Fi + Cellular 256
41.87 iPad Pro (9.7-inch) Magnet/Hall Effect Sensors 1 of 2 257
41.88 iPad Pro (9.7-inch) Magnet/Hall Effect Sensors 2 of 2 258
41.89 iPad Pro (12.9-inch) 1st Generation with Wi-Fi 259
41.90 iPad Pro (12.9-inch) 1st Generation with Wi-Fi + Cellular 260
41.91 iPad Pro (12.9-inch) 1st Generation Magnet/Hall Effect Sensors 1 of 2 261
41.92 iPad Pro (12.9-inch) 1st Generation Magnet/Hall Effect Sensors 2 of 2 262
41.93 iPad mini 4 with Wi-Fi 263
41.94 iPad mini 4 with Wi-Fi + Cellular 264
41.95 iPad mini 4 Magnet/Hall Effect Sensors 265
41.96 iPad Air 2 with Wi-Fi 266
41.97 iPad Air 2 with Wi-Fi + Cellular 267
41.98 iPad mini 2 & iPad mini 3 with Wi-Fi 268
41.99 iPad mini 2 & iPad mini 3 with Wi-Fi + Cellular 269
41.100 iPad Air with Wi-Fi 270
41.101 iPad Air with Wi-Fi + Cellular 271
41.102 iPad mini with Wi-Fi 272
41.103 iPad mini with Wi-Fi + Cellular 273
41.104 iPad (4th generation) with Wi-Fi 274
41.105 iPad (4th generation) with Wi-Fi + Cellular 275
41.106 iPod touch (6th generation) & iPod touch (7th generation) 276
41.107 iPod touch (5th generation) 277
41.108 Apple Watch Series 6, 44 mm 278
41.109 Apple Watch Series 6, 40 mm 279
41.110 Apple Watch SE, 44 mm 280
41.111 Apple Watch SE, 40 mm 281
41.112 Apple Watch Series 5, 44 mm 282
41.113 Apple Watch Series 5, 40 mm 283
41.114 Apple Watch Series 5 Ceramic, 44 mm 284
41.115 Apple Watch Series 5 Ceramic, 40 mm 285
41.116 Apple Watch Series 4, 44 mm 286
41.117 Apple Watch Series 4, 40 mm 287

2021-04-23 | Copyright © 2021 Apple Inc. All Rights Reserved.

41.118 Apple Watch Series 3 Ceramic, 42 mm 288
41.119 Apple Watch Series 3 Ceramic, 38 mm 289
41.120 Apple Watch Series 3 Metal, 42 mm 290
41.121 Apple Watch Series 3 Metal, 38 mm 291
41.122 Apple Watch Series 2 Ceramic, 42 mm 292
41.123 Apple Watch Series 2 Ceramic, 38 mm 293
41.124 Apple Watch Series 2 Metal, 42 mm 294
41.125 Apple Watch Series 2 Metal, 38 mm 295
41.126 Apple Watch (1st generation) & Apple Watch Series 1, 42 mm 296
41.127 Apple Watch (1st generation) & Apple Watch Series 1, 38 mm 297
41.128 AirPods Pro Wireless Charging Case 298
41.129 AirPods Wireless Charging Case 299
41.130 AirPods Pro 300
41.131 AirPods 301
41.132 AirTag 302

Revision History 303
Added Content 303
Updated Content 303

Copyright © 2021 Apple Inc. All Rights Reserved.

Overview

1. Introduction

Note:
These Accessory Design Guidelines for Apple Devices ('Guidelines') are subject to the terms and conditions set forth on the final page of this document. By downloading, accessing, or otherwise utilizing these Guidelines, you agree to be bound by, and only utilize the Guidelines in accordance with, such terms and conditions.

These guidelines address:

- The physical design of cases, covers, screen overlays, and camera attachments for iOS devices.
- The specifications for hardware accessories that use the Bluetooth transport to communicate with iOS devices and Mac computers.
- The design of AC power adapters, battery packs, and Qi wireless power transmitters for iOS devices.
- The physical design of band accessories that are compatible with Apple Watch.

These guidelines do not address other aspects of accessory communication with iOS, iPadOS, tvOS, or watchOS devices. Instead, see the Apple MFi licensing program (https://developer.apple.com/programs/mfi/) and the Accessory Interface Specification (page 16).

2021-04-23 | Copyright © 2021 Apple Inc. All Rights Reserved.

2. Requirements

The use of the words *shall*, *shall not*, *required*, *prohibited*, *should*, *should not*, *recommended*, *not recommended*, *may*, *optional*, and *deprecated* in a statement have the following meanings:

- *shall*, or *required* means the statement is an absolute requirement.
- *shall not* or *prohibited* means the statement is an absolute prohibition.
- *should* or *recommended* means the full implications shall be understood before choosing a different course.
- *should not* or *not recommended* means the full implications shall be understood before choosing this course.
- *may* or *optional* means the statement is truly optional, and its presence or absence cannot be assumed.
- *deprecated* means the statement is provided for historical purposes only and is equivalent to 'shall not'.

2021-04-23 | Copyright © 2021 Apple Inc. All Rights Reserved.

3. Terminology

3.1 Device

Device refers to an iPhone, iPad, or iPod.

iOS device refers to an iPhone or iPod running iOS.

iPadOS device refers to an iPad running iPadOS.

Where appropriate, specific Apple product and operating system references will also be used.

3.2 Accessory

Accessory refers to any product that connects to a *device* via the interfaces described in this specification.

3.3 Captured Cable

A captured cable is a cable that has one end permanently attached to the accessory enclosure.

See the Accessory Interface Specification (page 16) for more information.

3.4 Accessory Interface Specification

The *Accessory Interface Specification* is available to members of the Apple MFi licensing program (https://developer.apple.com/programs/mfi).

Use of some features requires accessory developers to be a member of the Apple MFi licensing program and to integrate specific MFi hardware into the accessory.

2021-04-23 | Copyright © 2021 Apple Inc. All Rights Reserved.

Accessories

4. All Accessories

The requirements in this section apply to all accessories regardless of their feature sets.

4.1 Compliance Testing

Accessories shall not assume that evidence of functionality when attached to a device means the accessory is compliant with this specification. Such an approach does not account for future devices or software releases and runs a high risk of depending on un-documented device behavior that is subject to change at any time.

If available, accessories should validate their design and implementation using the recommended test procedures for all supported features.

4.2 Integrated USB Receptacles

Accessories that incorporate a USB receptacle for the purpose of drawing power from an external USB power source shall meet the following requirements:

- USB-B receptacles shall comply with the *USB Battery Charging 1.2* specification.
- USB-C receptacles shall comply with the requirements in Drawing Power (page 163).

4.3 User Supplied Cables and AC Power Adapters

Accessories that can reasonably be used with user-supplied cables and/or AC power adapters shall be designed to work with any cable, AC power adapter, or battery pack that is compliant with this specification, see AC Power Adapters (page 56) and Battery Packs (page 59), including Apple branded cables and AC power adapters. Such accessories shall not declare compatibility only with Apple branded USB cables or AC power adapters.

This compatibility requirement applies to all aspects of user-supplied cables and power adapters. For example:

Copyright © 2021 Apple Inc. All Rights Reserved.

- Connector receptacles on accessories shall accommodate all spec-compliant connector overmolds, and any accessory opening surrounding the Lightning receptacle on a device shall provide sufficient clearance for spec-compliant connector overmolds.
- Accessories shall work with all cables that comply with the specification with regards to electrical DCR and SI.

Note:
Such accessories shall be tested with a wide variety of spec-compliant cables (including various lengths of the same cable if applicable) and AC power adapters during accessory development, in addition to Apple branded cables and AC power adapters.

4.4 Attachments

Accessories shall remain compliant with the specification when connected to any attachments designed for that accessory.

Examples of accessory attachments include, but are not limited to:
- Car or desk mounts for a case accessory.
- Wireless charging mats for a Lightning dongle or case accessory.
- Detachable barcode scanners/credit card readers for a Lightning dock accessory.

4.5 Magnetic Interference

Unless otherwise specified, Apple recommends avoiding the use of magnets and metal components in accessories.

All accessories claiming compatibility with a device that has a digital compass (magnetometer) shall minimize interference with the digital compass and shall not repeatedly trigger compass recalibration.

All accessories claiming compatibility with a device that has rear camera autofocus (AF) and/or optical image stabilization (OIS) features shall not affect the operation of these features.

This following devices feature optical image stabilization:
- iPhone 12 Pro Max
- iPhone 12 Pro
- iPhone 12
- iPhone 12 mini
- iPhone SE (2nd generation)
- iPhone 11 Pro Max

2021-04-23 | Copyright © 2021 Apple Inc. All Rights Reserved.

- iPhone 11 Pro
- iPhone 11
- iPhone XS Max
- iPhone XS
- iPhone XR
- iPhone X
- iPhone 8 Plus
- iPhone 8
- iPhone 7 Plus
- iPhone 7
- iPhone 6s Plus
- iPhone 6 Plus
- iPad Pro (12.9-inch) 2nd Generation
- iPad Pro (10.5-inch)

4.6 Radio Frequency (RF) Performance

This section contains RF performance requirements and recommendations for all accessories.

4.6.1 Materials and Coatings

Accessories should avoid use of:

- Metals
- Conductive materials or coatings
- Materials with high dielectric (permittivity >5 F/m)

Such materials absorb radio frequency energy and may impair or degrade the performance of antennas for cellular communication, GPS, Wi-Fi, Bluetooth, and NFC.

Examples include (but are not limited to) the following:

- Steel, aluminum, magnesium, titanium, etc.
- Plastics with any carbon content
- Plastics with any glass content
- Plastics with metallic plating
- Metallic paints
- Black paints with high carbon loading
- White paints with high titanium dioxide loading
- Metallic Physical Vapor Deposition (PVD) coatings

Copyright © 2021 Apple Inc. All Rights Reserved.

4.6.2 Antenna Keep-Out

Antenna keep-out regions can be found in Device Dimensional Drawings (page 167).

Accessory materials or coatings that absorb radio frequency energy, see Materials and Coatings (page 20), in the antenna keep-out region have a higher risk of degrading device wireless performance.

4.6.3 Over The Air (OTA) Transmission/Reception

Accessories shall not excessively degrade the device's RF transmission efficiency. This can be quantified by measuring Total Radiated Power (TRP) across all of the device's operating bands.

Accessories shall not excessively degrade the device's RF reception sensitivity. This can be quantified by measuring Effective Isotropic Sensitivity (EIS) across all of the device's operating bands.

Accessories may have a higher risk of excessively degrading device RF performance if they:

- Contain magnets.
- Intrude on device Antenna Keep-Out (page 21) zones.
- Contain active electronic circuitry, such as:
  - Bluetooth radios.
  - Switched-mode power supplies.
  - High speed data interfaces.

All accessory configurations shall be taken into account when designing for maximum RF compatibility. Examples include, but are not limited to:

- Accessory on/off.
- Accessory open/closed.
- Attachment present/not present, see Attachments (page 19).

A list of labs that can perform OTA testing with devices is available. See the document "MFi Authorized Test Labs" in the "Technical Reference" section of the MFi Portal.

4.6.4 Specific Absorption Rate (SAR)

A list of labs that can perform SAR testing with devices is available. See the document "SAR Test Services" in the "Technical Reference" section of the MFi Portal.

4.6.5 Near Field Communication (NFC)

Accessories that intrude on device Antenna Keep-Out (page 21) zones and claim compatibility with a device with NFC shall not degrade device NFC transaction performance.

The following devices are NFC enabled:

- iPhone 12 Pro Max

2021-04-23 | Copyright © 2021 Apple Inc. All Rights Reserved.

- iPhone 12 Pro
- iPhone 12
- iPhone 12 mini
- iPhone SE (2nd generation)
- iPhone 11 Pro Max
- iPhone 11 Pro
- iPhone 11
- iPhone XS Max
- iPhone XS
- iPhone XR
- iPhone X
- iPhone 8 Plus
- iPhone 8
- iPhone 7 Plus
- iPhone 7
- iPhone SE
- iPhone 6s Plus
- iPhone 6s
- iPhone 6 Plus
- iPhone 6

4.7 Thermal Management

The accessory's supported temperature range shall be greater than or equal to the published temperature ranges of every device it claims compatibility with.

4.8 Tripod Connections

Tripod connections shall comply with ISO 1222:2010.

2021-04-23 | Copyright © 2021 Apple Inc. All Rights Reserved.

5. Cases

Accessories that substantially enclose devices shall comply with the requirements stated in this chapter unless the accessory supports other features in this specification whose requirements conflict with the requirements in this chapter.

If the accessory has multiple user-detachable components that substantially enclose the device, the requirements and/or overrides shall be applied to each component separately.

5.1 Product Design

A well-designed case will securely house a device while not interfering with the device's operation. Significant factors in mechanical design include access to the device's sensors, controls, and connectors. Dimensional drawings for devices can be found in Device Dimensional Drawings (page 167).

5.1.1 Device Protection

Cases shall protect the device from a 1 m drop onto a hard paved surface in any device orientation.

Exposed glass on the device shall not come within 0.85 mm of a flat surface, such as a table or floor, in any orientation when the case is attached. It should not come within 1.00 mm.

Device protection should be achieved by either creating features around the exposed glass that will space it away from the flat surface or covering the exposed glass.

Care should be given to the design of the bottom of the case to achieve both device protection and access to device speakers, microphones, and connectors. For example, the bottom of iPhone X cases should:

- Not have an opening wider than 50 mm, see dimension A in Figure 5-1 (page 24).
- Be made of polycarbonate (PC) at least 1.15 mm thick, see dimension B in Figure 5-1 (page 24).

2021-04-23 | Copyright © 2021 Apple Inc. All Rights Reserved.

Figure 5-1 Device Protection

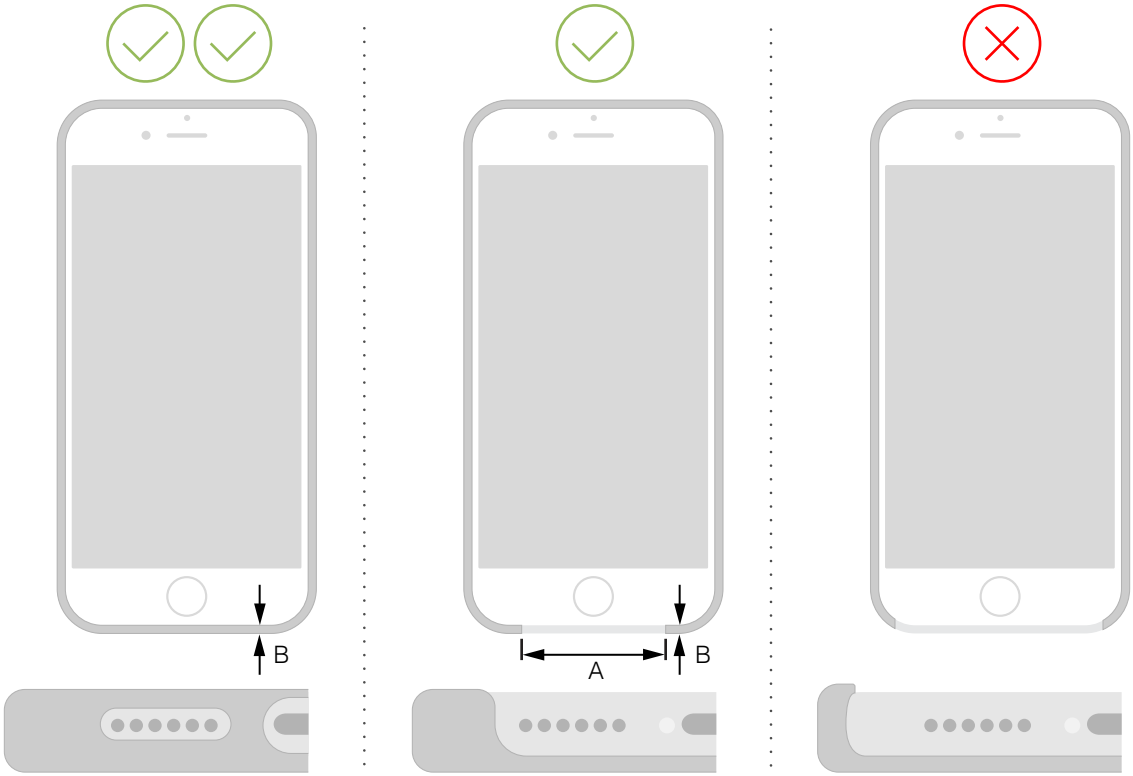

5.1.2 Access to Inputs and Interconnects

The accessory shall readily permit the user to access inputs and interconnects.

5.1.2.1 Access to Controls

The accessory shall readily permit the user to access and operate the device's mechanical controls, such as:

- Volume buttons
- Ring/Silent switch
- Side button
- Home/Touch ID sensor
- Home button
- Sleep/Wake button

5.1.2.2 Access to the Headset Jack

The case shall provide ready access to a device's headset jack (if present).

The headset jack opening (i.e., keep-out area):

Copyright © 2021 Apple Inc. All Rights Reserved.

- Shall be at least 6.0 mm in diameter and at most 14.0 mm deep.
- Should be at least 6.5 mm in diameter and at most 10.0 mm deep for best compatibility with a range of headsets.

Headset jack openings shall be designed with enough margin to compensate for shifting or dimensional changes of the accessory material.

5.1.2.3 Access to the Lightning Connector

If the case is for a device with the Lightning connector, the opening (i.e., keep-out area):

- Shall be at least 12.05 mm by 6.30 mm with full radii rounded edges.
- Should be at least 13.65 mm by 6.85 mm for best compatibility with a range of cables and docks.

Lightning connector openings shall be designed with enough margin to compensate for shifting or dimensional changes of the accessory material.

5.1.2.4 Touchscreen

The accessory should not have any edges that can collect water on the touchscreen area when the device is held at a 30° angle relative to the horizon.

Accessories shall allow a 120° opening along the edges of the active area of the touchscreen to ensure compatibility with the device touchscreen features. See Figure 5-2 (page 25) for more information on the keep-out and Device Dimensional Drawings (page 167) device specific active display areas.

Figure 5-2 Touchscreen keep-out area

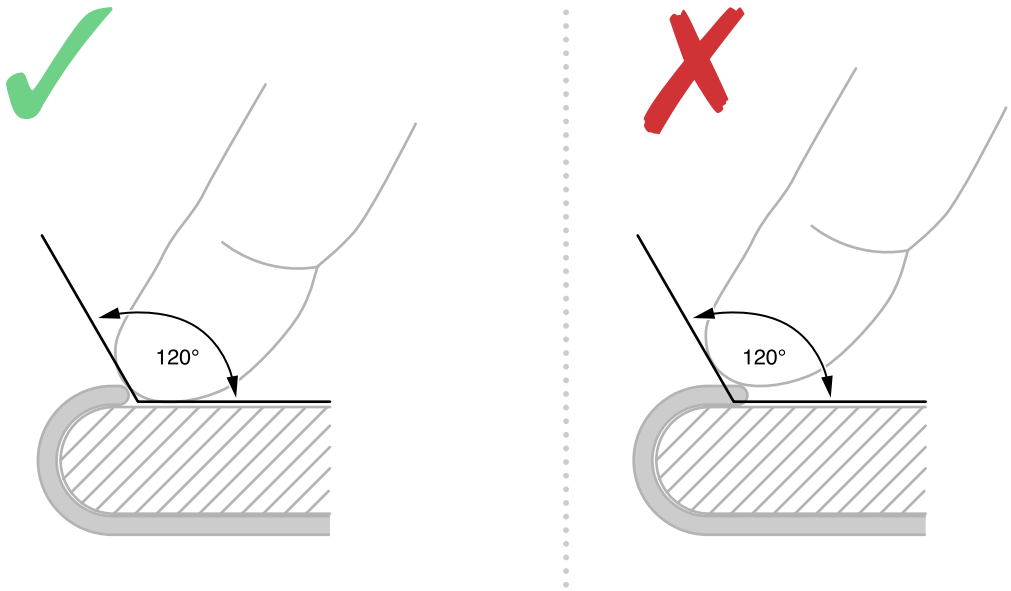

Copyright © 2021 Apple Inc. All Rights Reserved.

5.1.2.5 Edge Swipe Gestures

Users shall be able to easily use edge swipe gestures.

Examples of such gestures include, but are not limited to:

- Swipe in from the top edge for Control Center or Notification Center.
- Swipe in from the bottom edge for Home, App Switcher, or Reachability.
- Swipe in from the left edge in Messages or Mail to go back from a conversation.

The following devices make extensive use of edge swipe gestures in both portrait and landscape orientations:

- iPhone 12 Pro Max
- iPhone 12 Pro
- iPhone 12
- iPhone 12 mini
- iPhone SE (2nd generation)
- iPhone 11 Pro Max
- iPhone 11 Pro
- iPhone 11
- iPhone XS Max
- iPhone XS
- iPhone XR
- iPhone X
- iPad Pro (12.9-inch) 5th Generation
- iPad Pro (11-inch) 3rd Generation
- iPad Air (4th generation)
- iPad Pro (12.9-inch) 4th Generation
- iPad Pro (11-inch) 2nd Generation
- iPad Pro (12.9-inch) 3rd Generation
- iPad Pro (11-inch)

5.1.2.6 Edge Press Gestures

Users shall be able to easily use edge press gestures.

The following devices support edge press gestures:

- iPhone 8 Plus
- iPhone 8
- iPhone 7 Plus
- iPhone 7
- iPhone 6s Plus
- iPhone 6s

2021-04-23 | Copyright © 2021 Apple Inc. All Rights Reserved.

An edge press gesture from the left is used to bring up the task switcher in iOS 9.0 and later.

5.1.2.7 Cover Glass Contact

Cases that claim compatibility with the following devices should not contact the cover glass as defined in their dimensional drawings:

- iPhone 12 Pro Max
- iPhone 12 Pro
- iPhone 12
- iPhone 12 mini
- iPhone SE (2nd generation)
- iPhone 11 Pro Max
- iPhone 11 Pro
- iPhone 11
- iPhone XS Max
- iPhone XS
- iPhone XR
- iPhone X
- iPhone 8 Plus
- iPhone 8
- iPhone 7 Plus
- iPhone 7
- iPhone 6s Plus
- iPhone 6s
- iPhone 6 Plus
- iPhone 6

See Device Dimensional Drawings (page 167).

5.1.3 Dock Compatibility

The distance from bottom of the device to the outside of a case should not exceed 1.8 mm. This improves compatibility with Lightning docks such as the Apple iPhone Lightning Dock.

5.1.4 Wireless Power and Rear Pockets

Cases that claim compatibility with MagSafe or the Qi wireless power feature in devices shall not have rear pockets or holders for credit cards, RFID cards, or other similar items. Cards may be damaged and/or impact wireless charging performance.

2021-04-23 | Copyright © 2021 Apple Inc. All Rights Reserved.

5.2 Acoustics

The accessory shall not impair or degrade the acoustic performance of a device.

5.2.1 Call Quality

The accessory shall not impair or degrade the user's experience making and receiving both audio calls over a cellular network or audio/video calls using FaceTime in both handset and speakerphone modes. The accessory should not change the frequency response of the speakers or microphones. In addition, the user should not hear any distortion or echo resulting from the accessory.

The accessory shall not obstruct any microphones during a phone call. Note that occluding any microphones can result in call quality degradation.

5.2.2 Speaker to Microphone Coupling

Cases shall not facilitate the conduction of sound from any speaker to any microphone. Such sound conduction may cause echoing in phone calls.

5.2.3 Speaker/Microphone Openings

Device speaker/microphone port locations vary from model to model, see Device Dimensional Drawings (page 167).

5.2.3.1 Thin Cases (≤2.25 mm)

Microphone/speaker openings in thin cases should:

- Be offset at least 2.0 mm from the edge of any device speaker/microphone port.
- Be at most 1.5 mm thick along their inner diameter.
- Have a maximum 45° incoming angle to their inner diameter.
- Maintain a proper seal against the device between speaker/microphone ports.

2021-04-23 | Copyright © 2021 Apple Inc. All Rights Reserved.

Figure 5-3 Microphone/speaker opening recommendations for thin cases

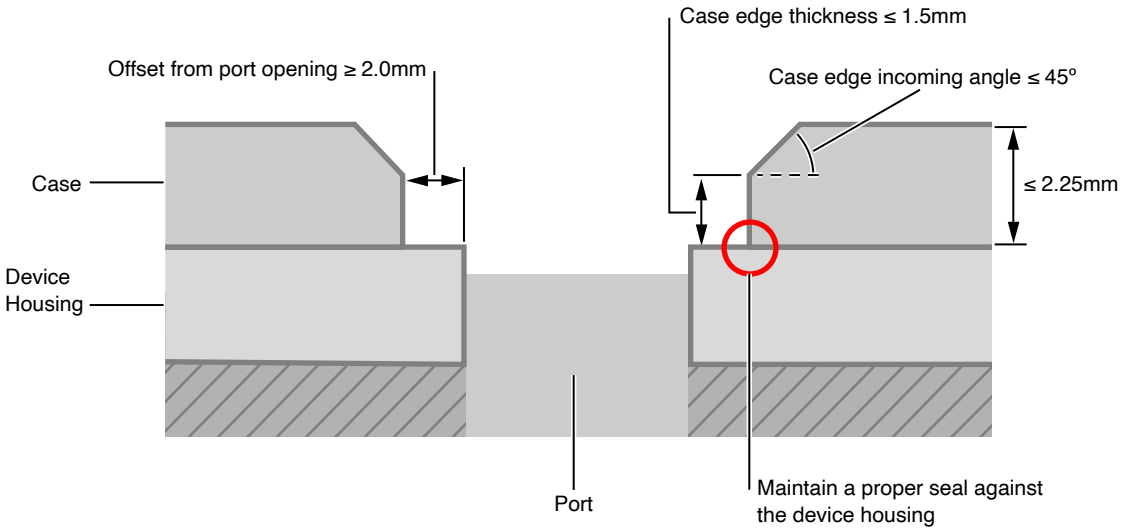

5.2.3.2 Thick Cases (>2.25 mm)

Speaker and microphone openings should be channeled independently and without interruption to/from the outside surface of a thick case.

Figure 5-4 Thick case acoustic channels

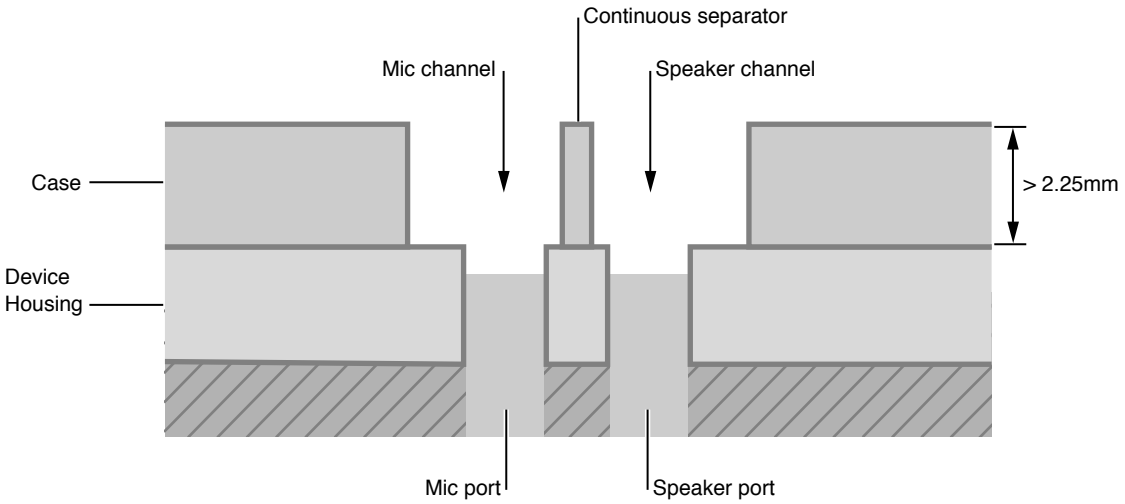

Thick cases should maximize exit separation between speaker and microphone channels.

Copyright © 2021 Apple Inc. All Rights Reserved.

Figure 5-5 Thick case microphone and speaker exit separation

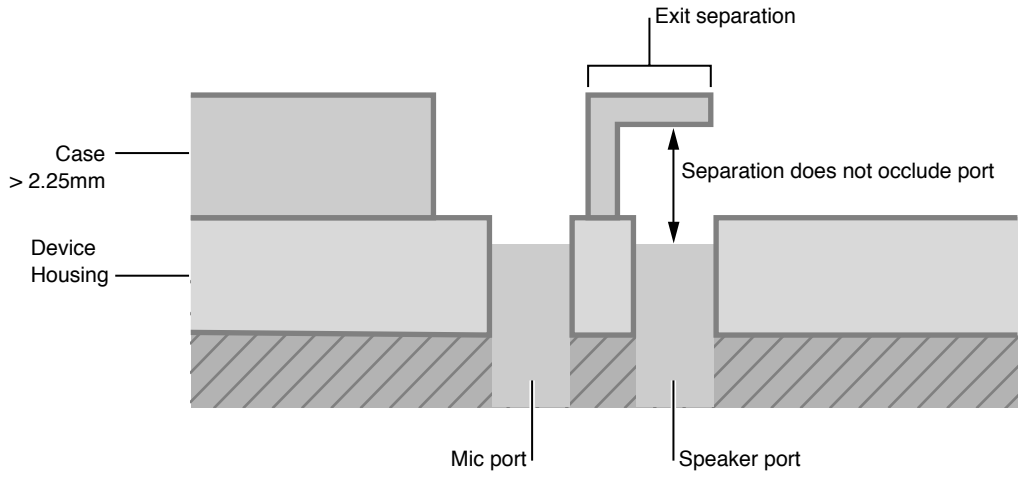

Thick case channels may act as a resonant chamber and detune microphone/speaker frequency response. The resulting frequency response may vary according to channel size/shape.

If a thick case does not maintain a proper seal against the device between microphone/speaker channels, the case itself may become an acoustic chamber.

Figure 5-6 Improper thick case seal

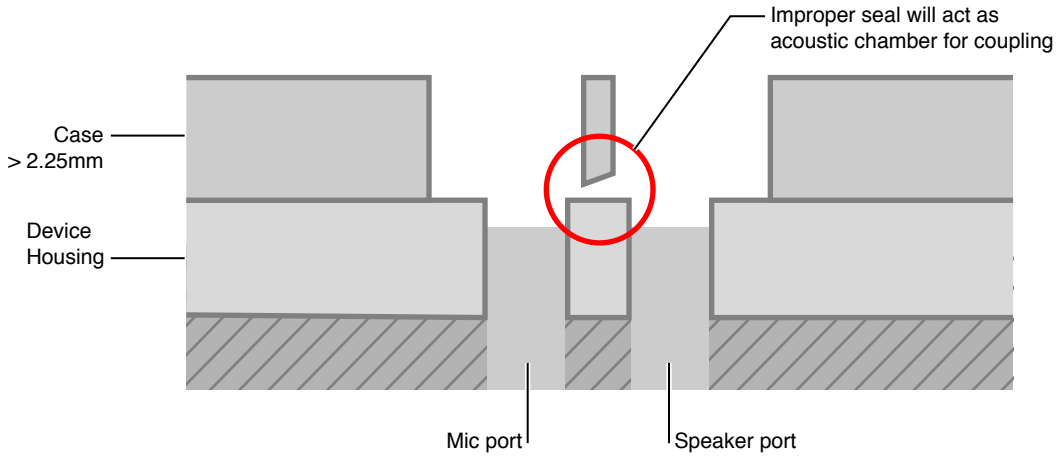

Copyright © 2021 Apple Inc. All Rights Reserved.

5.3 Ambient Light Sensor and Proximity Sensor Interference

The ambient light sensor and proximity sensor locations for various devices are shown in the dimensional drawings cited in Device Dimensional Drawings (page 167). Some of the dimensional drawings specify a recommended keep-out area around these sensors. No material shall be allowed to cover these sensors or their keep-out areas, this includes films and privacy screens. Accessories that allow the device to slide around shall not obstruct any sensors.

5.4 Taptic Engine

Accessories should not cause substantial change in the feel of the device's Taptic Engine.

The following devices contain a Taptic Engine:

- iPhone 12 Pro Max
- iPhone 12 Pro
- iPhone 12
- iPhone 12 mini
- iPhone SE (2nd generation)
- iPhone 11 Pro Max
- iPhone 11 Pro
- iPhone 11
- iPhone XS Max
- iPhone XS
- iPhone XR
- iPhone X
- iPhone 8 Plus
- iPhone 8
- iPhone 7 Plus
- iPhone 7
- iPhone 6s Plus
- iPhone 6s

5.5 Magnetic Interference

Cases shall not interfere with the device's:

- Magnetic compass.
- Rear camera autofocus.
- Rear camera optical image stabilization (OIS), if present.

2021-04-23 | Copyright © 2021 Apple Inc. All Rights Reserved.

See Magnetic Interference (page 19) for additional details.

5.6 Home Button / Touch ID Sensor

Accessories shall not inhibit use of the device's Home button / Touch ID sensor including features such as Touch ID fingerprint recognition.

Home button / Touch ID sensor keep-outs for devices can be found in Device Dimensional Drawings (page 167).

Additionally, accessories that overlay the iPhone SE (2nd generation), iPhone 8 Plus, iPhone 8, iPhone 7 Plus, and iPhone 7 Home button / Touch ID sensor may cause users to have difficulty using the Home button / Touch ID sensor.

5.7 Camera

The field of view (FOV) of the camera and the illumination provided by the flash are designed for each device camera. It is imperative that manufacturers consult technical specifications released for each device and do not assume these parameters are shared between devices.

Images from the camera may be affected by the geometry, color, and surface finish of the accessory openings for camera and applicable flash.

5.7.1 Geometry

The camera lens FOV shall not be blocked. Making the accessory opening too small around the camera and flash may block the FOV of the lens and the illumination from the flash. Blocking the FOV may cause vignetting in the image, where one or more corners of the image reproduced are darker than the center. Blocking marginal rays just outside the FOV of the lens may also reduce the sharpness and contrast of the image. Blocking the illumination from the flash may cause haze in the image, which resulting in reduced contrast. See Device Dimensional Drawings (page 167) for the camera keep-out.

The accessory opening shall not be designed in a way that directs stray light into the camera. If the opening is too narrow or too steep, it may reflect light into the camera, washing out the image or adding an unwanted color cast. Adding a chamfer to the accessory opening trim may help to direct stray light away from the camera. Additionally, where the product is equipped with a flash, a narrow or steep opening may reflect light from the accessory opening back into the camera. This may cause the image to appear washed out or contain unwanted artifacts. Designers should ensure that the mechanical keep-outs outlined in the Device Dimensional Drawings (page 167) are maintained with worst-case X-Y placement tolerances to minimize the risk of haze.

2021-04-23 | Copyright © 2021 Apple Inc. All Rights Reserved.

5.7.2 Color

Any light reflected from the accessory may pick up the color of the accessory. Black material or black coating may help avoid color bleeding into the camera from an external light source or the flash. The darker the color, the less light may be reflected from the source into the camera.

> **Note:**
> Apple recommends a semi-gloss black material or coating around the camera and flash opening.

5.7.3 Surface Finish

The flash is a strong source of light and reflections from the camera accessory opening trim should be managed so that they do not reflect back into the camera. Semi-gloss material may direct light away from the camera. Matte or diffuse materials scatter light in all directions and will increase the likelihood that light from the flash or strong light sources in the scene is reflected into the camera.

5.7.4 Image Degradation Examples

Figure 5-7 Sample image degradation by image blocking in ambient condition

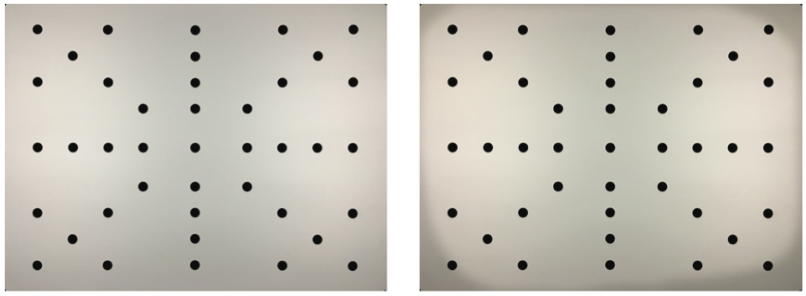

Reference Degraded

Figure 5-8 Sample image degradation by color shift through accessory with strong color

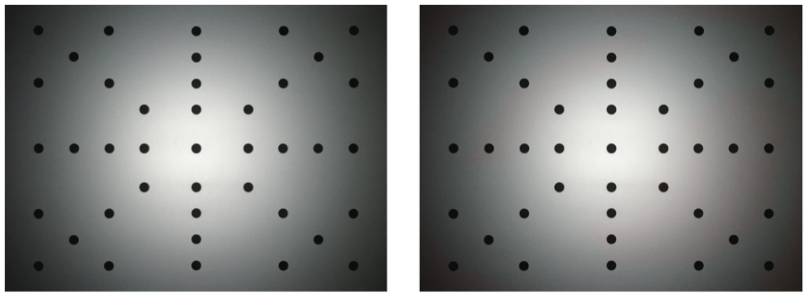

Reference Degraded

Copyright © 2021 Apple Inc. All Rights Reserved.

Figure 5-9 Sample image degradation by flash interference

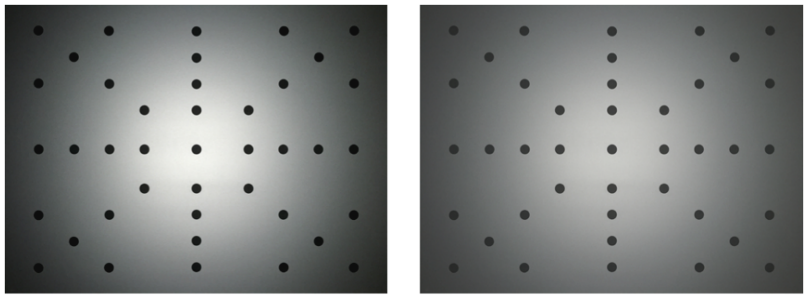

5.8 Reliability

Cases for devices shall be tested to verify that they will withstand long-term use under typical use conditions, and that they do not impair or degrade the functionality of the device, damage it or its immediate surroundings, or adversely affect the user.

5.8.1 Device Insertion and Removal

The case shall hold the device securely while permitting its easy insertion and removal. The case and the enclosed device shall not be damaged by the repeated insertion and removal of the device from the case under conditions representative of long-term use in a variety of environments.

5.8.2 Colorfastness

Any dyes, inks, or coatings in or on the case shall not bleed color onto either the device or its user, particularly while the case is in contact with common substances, such as water or sunscreen.

5.9 Environmental

Accessories shall comply with applicable environmental regulations in the regions in which such accessories are to be sold, and any applicable substance or material restrictions, including applicable restrictions on the following substances:

- Organic tin compounds, PFOS, PFOA, phthalates, azo dyes, polybrominated biphenyls (PBBs) and PAHs, per requirements of the EU REACh regulation EC 1907/2006.
- Nickel leach rate on surfaces in prolonged skin contact, per requirements of the EU REACh regulation EC 1907/2006.
- Cadmium, lead, hexavalent chromium, and nickel, per requirements of EU Directive 2009/48/EC.

2021-04-23 | Copyright © 2021 Apple Inc. All Rights Reserved.

- Natural rubber latex, per requirements of EU Directive EC 93/42/EEC.
- Dimethylfumarate (DMFu), per requirements of EU Regulation 412/2012.
- pH and Formaldehyde, per requirements of China GB 18401 for textiles and China GB 20400 for leather.
- Endangered species of flora and fauna in products or packaging (US Lacey Act).
- Polybrominated diphenyl ethers (PBDE).
- Compliance with California proposition 65, as applicable.

5.10 Test Procedures

5.10.1 Device Models

Case testing procedures vary depending on the device they enclose.

5.10.1.1 iPhone 12 Pro Max

Table 5-1 iPhone 12 Pro Max Case Testing Matrix

Test	Using	Notes
Product Design (page 44)	iPhone 12 Pro Max	
Taptic Engine (page 46)	iPhone 12 Pro Max	
Acoustics (page 47)	iPhone 12 Pro Max	

5.10.1.2 iPhone 12 Pro

Table 5-2 iPhone 12 Pro Case Testing Matrix

Test	Using	Notes
Product Design (page 44)	iPhone 12 Pro	
Taptic Engine (page 46)	iPhone 12 Pro	
Acoustics (page 47)	iPhone 12 Pro	

5.10.1.3 iPhone 12

Table 5-3 iPhone 12 Case Testing Matrix

Test	Using	Notes
Product Design (page 44)	iPhone 12	

2021-04-23 | Copyright © 2021 Apple Inc. All Rights Reserved.

Test	Using	Notes
Taptic Engine (page 46)	iPhone 12	
Acoustics (page 47)	iPhone 12	

5.10.1.4 iPhone 12 mini

Table 5-4 iPhone 12 mini Case Testing Matrix

Test	Using	Notes
Product Design (page 44)	iPhone 12 mini	
Taptic Engine (page 46)	iPhone 12 mini	
Acoustics (page 47)	iPhone 12 mini	

5.10.1.5 iPhone 11 Pro Max

Table 5-5 iPhone 11 Pro Max Case Testing Matrix

Test	Using	Notes
Product Design (page 44)	iPhone 11 Pro Max	
Taptic Engine (page 46)	iPhone 11 Pro Max	
Acoustics (page 47)	iPhone 11 Pro Max	

5.10.1.6 iPhone 11 Pro

Table 5-6 iPhone 11 Pro Case Testing Matrix

Test	Using	Notes
Product Design (page 44)	iPhone 11 Pro	
Taptic Engine (page 46)	iPhone 11 Pro	
Acoustics (page 47)	iPhone 11 Pro	

5.10.1.7 iPhone 11

Table 5-7 iPhone 11 Case Testing Matrix

Test	Using	Notes
Product Design (page 44)	iPhone 11	
Taptic Engine (page 46)	iPhone 11	
Acoustics (page 47)	iPhone 11	

2021-04-23 | Copyright © 2021 Apple Inc. All Rights Reserved.

5.10.1.8 iPhone XS Max

Table 5-8 iPhone XS Max Case Testing Matrix

Test	Using	Notes
Product Design (page 44)	iPhone XS Max	
Taptic Engine (page 46)	iPhone XS Max	
Acoustics (page 47)	iPhone XS Max	

5.10.1.9 iPhone XS

Table 5-9 iPhone XS Case Testing Matrix

Test	Using	Notes
Product Design (page 44)	iPhone XS	
Taptic Engine (page 46)	iPhone XS	
Acoustics (page 47)	iPhone XS	

5.10.1.10 iPhone XR

Table 5-10 iPhone XR Case Testing Matrix

Test	Using	Notes
Product Design (page 44)	iPhone XR	
Taptic Engine (page 46)	iPhone XR	
Acoustics (page 47)	iPhone XR	

5.10.1.11 iPhone X

Table 5-11 iPhone X Case Testing Matrix

Test	Using	Notes
Product Design (page 44)	iPhone X	
Taptic Engine (page 46)	iPhone X	
Acoustics (page 47)	iPhone X	

2021-04-23 | Copyright © 2021 Apple Inc. All Rights Reserved.

5.10.1.12 iPhone 8 Plus/iPhone 7 Plus

Table 5-12 iPhone 8 Plus/iPhone 7 Plus Case Testing Matrix

Test	Using	Notes
Product Design (page 44)	iPhone 8 Plus and iPhone 7 Plus	
Taptic Engine (page 46)	iPhone 8 Plus and iPhone 7 Plus	
Home Button / Touch ID Sensor Overlays (page 46)	iPhone 8 Plus and iPhone 7 Plus	
Acoustics (page 47)	iPhone 8 Plus and iPhone 7 Plus	

It is not possible for a case to claim compatibility with only the iPhone 8 Plus or only the iPhone 7 Plus.

5.10.1.13 iPhone SE (2nd generation)/iPhone 8/iPhone 7

Table 5-13 iPhone SE (2nd generation)/iPhone 8/iPhone 7 Case Testing Matrix

Test	Using	Notes
Product Design (page 44)	iPhone SE (2nd generation), iPhone 8, and iPhone 7	
Taptic Engine (page 46)	iPhone SE (2nd generation), iPhone 8, and iPhone 7	
Home Button / Touch ID Sensor Overlays (page 46)	iPhone SE (2nd generation), iPhone 8, and iPhone 7	
Acoustics (page 47)	iPhone SE (2nd generation), iPhone 8, and iPhone 7	

It is not possible for a case to claim compatibility with only the iPhone SE (2nd generation), only the iPhone 8, or only the iPhone 7.

5.10.1.14 iPhone 6s Plus/iPhone 6 Plus

Table 5-14 iPhone 6s Plus/iPhone 6 Plus Case Testing Matrix

Test	Using	Notes
Product Design (page 44)	iPhone 6s Plus and iPhone 6 Plus	
Taptic Engine (page 46)	iPhone 6s Plus	

It is not possible for a case to claim compatibility with only the iPhone 6s Plus or only the iPhone 6 Plus.

2021-04-23 | Copyright © 2021 Apple Inc. All Rights Reserved.

5.10.1.15 iPhone 6s/iPhone 6

Table 5-15 iPhone 6s/iPhone 6 Case Testing Matrix

Test	Using	Notes
Product Design (page 44)	iPhone 6s and iPhone 6	
Taptic Engine (page 46)	iPhone 6s	

It is not possible for a case to claim compatibility with only the iPhone 6s or only the iPhone 6.

5.10.1.16 iPhone 5/iPhone 5s/iPhone SE

Table 5-16 iPhone 5/iPhone 5s/iPhone SE Case Testing Matrix

Test	Using	Notes
Product Design (page 44)	iPhone SE	

It is not possible for a case to claim compatibility with only the iPhone 5 or only the iPhone 5s or only the iPhone SE.

5.10.1.17 iPhone 5c

Table 5-17 iPhone 5c Case Testing Matrix

Test	Using	Notes
Product Design (page 44)	iPhone 5c	

5.10.1.18 iPad Pro (12.9-inch) 5th Generation

Table 5-18 iPad Pro (12.9-inch) 5th Generation Case Testing Matrix

Test	Using	Notes
Product Design (page 44)	iPad Pro (12.9-inch) 5th Generation	

5.10.1.19 iPad Pro (11-inch) 3rd Generation

Table 5-19 iPad Pro (11-inch) 3rd Generation Case Testing Matrix

Test	Using	Notes
Product Design (page 44)	iPad Pro (11-inch) 3rd Generation	

2021-04-23 | Copyright © 2021 Apple Inc. All Rights Reserved.

5.10.1.20 iPad Air (4th generation)

Table 5-20 iPad Air (4th generation) Case Testing Matrix

Test	Using	Notes
Product Design (page 44)	iPad Air (4th generation)	

5.10.1.21 iPad Pro (12.9-inch) 4th Generation

Table 5-21 iPad Pro (12.9-inch) 4th Generation Case Testing Matrix

Test	Using	Notes
Product Design (page 44)	iPad Pro (12.9-inch) 4th Generation	

5.10.1.22 iPad Pro (11-inch) 2nd Generation

Table5-22 iPad Pro (11-inch) 2nd Generation Case Testing Matrix

Test	Using	Notes
Product Design (page 44)	iPad Pro (11-inch) 2nd Generation	

5.10.1.23 iPad (7th generation)/iPad (8th generation)

Table 5-23 iPad (7th generation)/iPad (8th generation) Case Testing Matrix

Test	Using	Notes
Product Design (page 44)	iPad (7th generation) and iPad (8th generation)	

It is not possible for a case to claim compatibility with only the iPad (7th generation) or only the iPad (8th generation).

5.10.1.24 iPad Air (3rd generation)

Table 5-24 iPad Air (3rd generation) Case Testing Matrix

Test	Using	Notes
Product Design (page 44)	iPad Air (3rd generation)	

2021-04-23 | Copyright © 2021 Apple Inc. All Rights Reserved.

5.10.1.25 iPad mini (5th generation)

Table 5-25 iPad mini (5th generation) Case Testing Matrix

Test	Using	Notes
Product Design (page 44)	iPad mini (5th generation)	

5.10.1.26 iPad Pro (12.9-inch) 3rd Generation

Table 5-26 iPad Pro (12.9-inch) 3rd Generation Case Testing Matrix

Test	Using	Notes
Product Design (page 44)	iPad Pro (12.9-inch) 3rd Generation	

5.10.1.27 iPad Pro (11-inch)

Table 5-27 iPad Pro (11-inch) Case Testing Matrix

Test	Using	Notes
Product Design (page 44)	iPad Pro (11-inch)	

5.10.1.28 iPad Pro (10.5-inch)

Table 5-28 iPad Pro (10.5-inch) Case Testing Matrix

Test	Using	Notes
Product Design (page 44)	iPad Pro (10.5-inch)	

5.10.1.29 iPad Pro (12.9-inch) 2nd Generation

Table 5-29 iPad Pro (12.9-inch) 2nd Generation Case Testing Matrix

Test	Using	Notes
Product Design (page 44)	iPad Pro (12.9-inch) 2nd Generation	

2021-04-23 | Copyright © 2021 Apple Inc. All Rights Reserved.

5.10.1.30 iPad (5th and 6th generation)

Table 5-30 iPad (5th and 6th generation) Case Testing Matrix

Test	Using	Notes
Product Design (page 44)	iPad (5th generation) or iPad (6th generation)	

5.10.1.31 iPad Pro (9.7-inch)

Table 5-31 iPad Pro (9.7-inch) Case Testing Matrix

Test	Using	Notes
Product Design (page 44)	iPad Pro (9.7-inch)	

5.10.1.32 iPad Pro (12.9-inch) 1st Generation

Table 5-32 iPad Pro (12.9-inch) 1st Generation Case Testing Matrix

Test	Using	Notes
Product Design (page 44)	iPad Pro (12.9-inch) 1st Generation	

5.10.1.33 iPad mini 4

Table 5-33 iPad mini 4 Case Testing Matrix

Test	Using	Notes
Product Design (page 44)	iPad mini 4	

5.10.1.34 iPad mini/iPad mini 2/iPad mini 3

Table 5-34 iPad mini/iPad mini 2/iPad mini 3 Case Testing Matrix

Test	Using	Notes
Product Design (page 44)	iPad mini 3	

2021-04-23 | Copyright © 2021 Apple Inc. All Rights Reserved.

It is not possible for a case to claim compatibility with only the iPad mini or only the iPad mini 2 or only the iPad mini 3.

5.10.1.35 iPad Air 2

Table 5-35 iPad Air 2 Case Testing Matrix

Test	Using	Notes
Product Design (page 44)	iPad Air 2	

5.10.1.36 iPad Air

Table 5-36 iPad Air Case Testing Matrix

Test	Using	Notes
Product Design (page 44)	iPad Air	

5.10.1.37 iPad (4th generation)

Table5-37 iPad (4th generation) Case Testing Matrix

Test	Using	Notes
Product Design (page 44)	iPad (4th generation)	

5.10.1.38 iPod touch (5th generation)/iPod touch (6th generation)/iPod touch (7th generation)

Table 5-38 iPod touch (5th generation)/iPod touch (6th generation)/iPod touch (7th generation) Case Testing Matrix

Test	Using	Notes
Product Design (page 44)	iPod touch (7th generation)	

It is not possible for a case to claim compatibility with only the iPod touch (5th generation), iPod touch (6th generation) or the iPod touch (7th generation).

Copyright © 2021 Apple Inc. All Rights Reserved.

5.10.2 Product Design

5.10.2.1 Equipment

- Device
- Apple Lightning Digital AV Adapter
- Vernier calipers
- 0.85 mm plastic feeler gauge
- EarPods with 3.5 mm Headphone Plug

5.10.2.2 Procedure

1. Insert the device into the case.
2. Verify that the device completely fits inside the case.
3. Verify the device is not loose.
4. Verify that all buttons are accessible.
5. Inspect for button feel. Verify that all buttons are not too hard to press or take a lot of effort to press.
6. If the device has an Apple Lightning receptacle:
   a. Insert the Apple Lightning Digital AV Adapter into the Lightning receptacle and verify that it fits.
   b. Using vernier calipers, measure the Lightning connector opening on the case. Verify that the opening is measured to be at least 12.05 mm by 6.30 mm.
7. If the device has a 3.5 mm headset jack:
   a. Insert EarPods with 3.5 mm Headphone Plug into the headset jack of the device and verify it fits.
   b. Using vernier calipers, measure the headset jack opening on the case. Verify that the opening is measured to be at least 6 mm in diameter and no more than 14 mm deep.
8. If the device has a Touch ID sensor, use vernier calipers to verify that the case is at least 2 mm away from the Touch ID sensor.

2021-04-23 | Copyright © 2021 Apple Inc. All Rights Reserved.

9. Verify that the case is always proud of the feeler gauge when the gauge is placed at each corner of the device. See Figure 5-10 (page 45).

Figure 5-10 Device proudness test

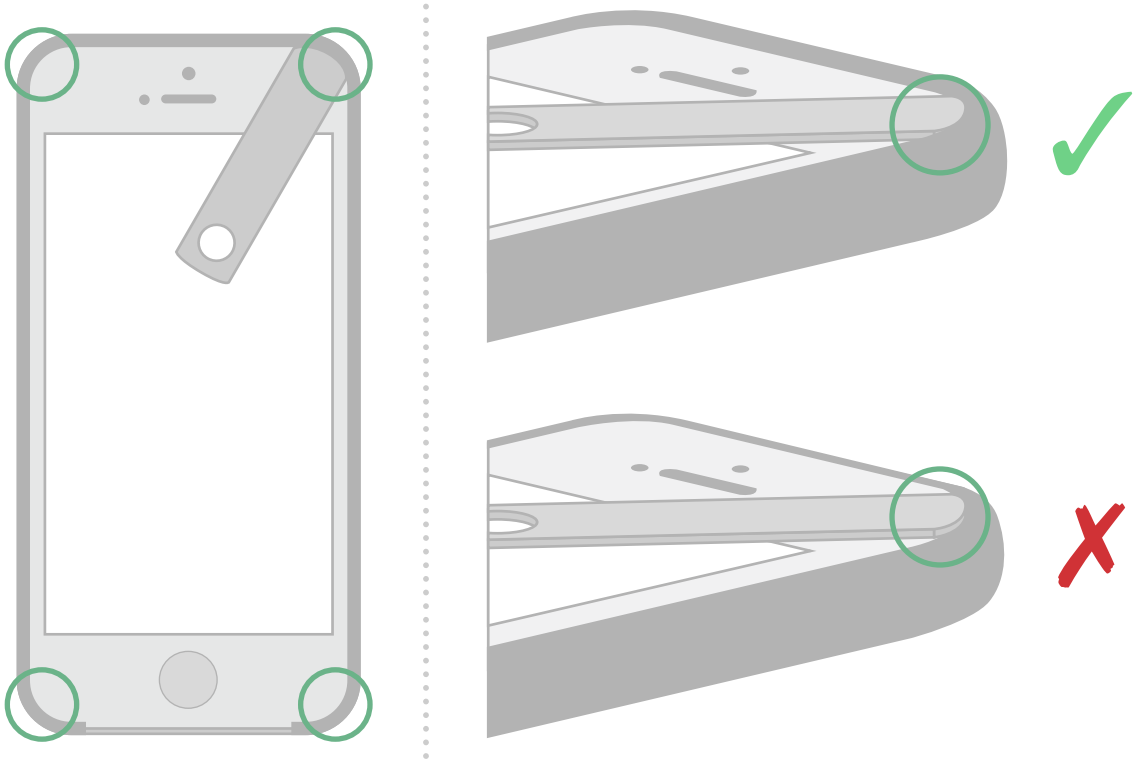

10. Set the device flat on its face (screen facing down).
11. Roll the device towards any side that is not enclosed by the case until the gap between the device's exposed glass and flat surface is smallest.
12. Verify that the feeler gauge fits into the gap between the device's exposed glass and flat surface.

Figure 5-11 Device gap test

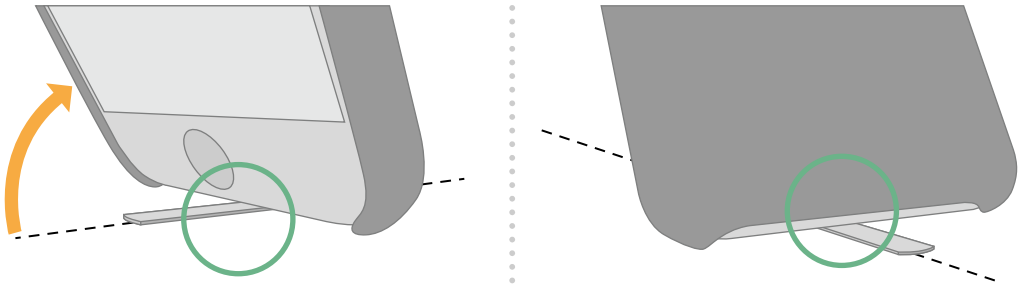

13. If the case has an overlay, verify that there are no air gaps introduced between it and the touchscreen.

Copyright © 2021 Apple Inc. All Rights Reserved.

5.10.3 Taptic Engine

5.10.3.1 Equipment

- Two devices A and B, same model
- Table

5.10.3.2 Procedure

1. Attach the case to device B.
2. Place device A on top of the table.
3. Place device B on top of the table next to device A.
4. Compare the Taptic Engine feedback between device A and device B for each of the following tasks:
   a. Go to: *Settings* > *Sound* & *Haptics*, set *Vibrate on Silent* to the on position.
   b. Toggle the Ring/Silent switch.
   c. Connect a charger to both devices.
   d. Go to: *Settings* > *Notifications* > *Phone* > *Sounds*, select *Reflection (Default)*.
   e. Go to: *Settings* > *Notifications* > *Messages* > *Sounds*, select *Note (Default)*.
   f. Go to the Home screen.
   g. Trigger a Quick Actions menu by applying pressure to the Settings app. Continue applying pressure.
   h. Slide your finger across the Quick Actions menu and release when Wi-Fi is selected.
   i. Go to the Home screen.
   j. Apply pressure to the Home app.
   k. Go to: Clock app and select *Timer* on the bottom right.
   l. Scroll through the hours and minutes.
5. If the device has a Home button:
   a. Go to: *Settings* > *General* > *Home Button*, tap option 2.
   b. Press the Home button.
6. Repeat the above tasks while holding device A in the left hand and device B in the right hand.

5.10.3.3 Pass/Fail Criteria

The case does not cause substantial change in the feel of the device's Taptic Engine.

5.10.4 Home Button / Touch ID Sensor Overlays

This test procedure is applicable to all iPhone SE (2nd generation), iPhone 8 Plus, iPhone 8, iPhone 7 Plus or iPhone 7 accessories that overlay the Home button or the Touch ID sensor.

Copyright © 2021 Apple Inc. All Rights Reserved.

5.10.4.1 Equipment

- Nitrile gloves (e.g. Ansell TNT Blue)
- Ethyl alcohol hand sanitizer (e.g. Purell)
- Scissors

5.10.4.2 Procedure

1. Cut off a square of material from the nitrile glove's wrist portion.
2. Install the accessory onto the device.
3. Press the sleep/wake or side button to place the device into a sleep state (display off).
4. Place the square of nitrile glove material over the device's Home button / Touch ID sensor with the glove's outer side facing away from the device.
5. Apply a small amount of hand sanitizer (approximately dime-sized) to the nitrile over the Home button / Touch ID sensor.
6. Repeat the following steps 10 times:
   a. Press the Home button / Touch ID sensor with a thumb.
   b. Verify that the device wakes (display on).
   c. Press the sleep/wake or side button to place the device into a sleep state (display off).
7. Repeat the following steps 10 times:
   a. Press the Home button / Touch ID sensor with an index finger.
   b. Verify that the device wakes (display on).
   c. Press the sleep/wake or side button to place the device into a sleep state (display off).

5.10.4.3 Pass/Fail Criteria

Verify the device wakes every time the Home button / Touch ID sensor is pressed.

5.10.5 Acoustics

The following test procedures apply to devices with a built in speaker and/or microphone.

5.10.5.1 Speakerphone Call

This procedure evaluates the impact of a case on the speakerphone performance of a device.

5.10.5.1.1 Equipment and Test Setup

This procedure needs two operators in separate quiet rooms.

Room A:

- Operator A
- The device (with cellular service) used to evaluate the case.

Copyright © 2021 Apple Inc. All Rights Reserved.

- The device should have at least two out of five bars of cellular reception within the room.

Room B:
- Operator B
- Landline speakerphone
- Digital audio recorder (e.g., a device with the Voice Memo app)

5.10.5.1.2 Pass/Fail Criteria

There are two categories of failure for this procedure:
- Echo: If Operator B hears their own voice from the landline.
- Double Talk: If Operator B hears Operator A inconsistently.

The pass/fail threshold for these two categories should be established by performing the test procedure using:
- The device (without the case) as a reference.

There should be no perceivable difference between the reference and the test conducted with the case on the device.

5.10.5.1.3 Procedure

1. Operator A: Use the device (without a case) in Room A to call the landline phone in Room B.
2. Operator A: Place the device in speakerphone mode.
3. Operator B: Answer the call with the landline phone in Room B.
4. Operator B: Place the landline phone in speakerphone mode.
5. Operator A and B: Simultaneously recite the following phrases to evaluate the call quality:
   a. The birch canoe slid on the smooth planks.
   b. Glue the sheet to the dark blue background.
   c. It's easy to tell the depth of a well.
   d. These days a chicken leg is a rare dish.
   e. Rice is often served in round bowls.
   f. The juice of lemons makes fine punch.
   g. The box was thrown beside the parked truck.
   h. The hogs were fed chopped corn and garbage.
   i. Four hours of steady work faced us.
   j. Large size in stockings is hard to sell.
6. Operator B: Evaluate the call. Ensure that the call is clear when there is no case on the device.
7. Operator A: Place the case on the device.
8. Operator B: Start audio recording using a digital audio recorder.
9. Operator A: State the test date and identify the manufacturer name, product name, and a unique identifier (UID) for case (production run name, design version, etc.).

Copyright © 2021 Apple Inc. All Rights Reserved.

10. Operator A and B: Simultaneously recite the same phrases as above.
11. Operator B: Stop audio recording.
12. Operator B: Evaluate the recording against the Pass/Fail Criteria (page 48).

Note:
The phrases used for this test procedure are from "IEEE Recommended Practice for Speech Quality Measurements," in *IEEE Transactions on Audio and Electroacoustics*, vol. 17, no. 3, pp. 225-246, September 1969.

2021-04-23 | Copyright © 2021 Apple Inc. All Rights Reserved.

6. Covers

This chapter is applicable to accessories that cover device displays.

6.1 Magnetic Interference

Accessory covers shall not interfere with the device's:

- Magnetic compass.
- Rear camera autofocus.
- Rear camera optical image stabilization (OIS), if present.

See Magnetic Interference (page 19) for additional details.

6.2 Smart Covers

Dimensional drawings indicating magnet and Hall effect sensor locations are available for the following devices:

- iPad Pro (12.9-inch) 5th Generation 3 of 5 (page 200)
- iPad Pro (11-inch) 3rd Generation 3 of 5 (page 205)
- iPad Air (4th generation) 3 of 5 (page 210)
- iPad Pro (12.9-inch) 4th Generation 3 of 5 (page 215)
- iPad Pro (11-inch) 2nd Generation 3 of 5 (page 220)
- iPad (7th generation) & iPad (8th generation) 2 of 3 (page 224)
- iPad Air (3rd generation) with Wi-Fi 2 of 3 (page 227)
- iPad Air (3rd generation) with Wi-Fi + Cellular 2 of 3 (page 230)
- iPad mini (5th generation) with Wi-Fi 2 of 3 (page 233)
- iPad mini (5th generation) with Wi-Fi + Cellular 2 of 3 (page 236)
- iPad Pro (12.9-inch) 3rd Generation 2 of 3 (page 239)
- iPad Pro (11-inch) 2 of 3 (page 242)
- iPad Pro (12.9-inch) 2nd Generation Magnet/Hall Effect Sensors 1 of 2 (page 246)
- iPad Pro (12.9-inch) 2nd Generation Magnet/Hall Effect Sensors 2 of 2 (page 247)
- iPad Pro (10.5-inch) Magnet/Hall Effect Sensors 1 of 2 (page 250)
- iPad Pro (10.5-inch) Magnet/Hall Effect Sensors 2 of 2 (page 251)
- iPad (5th and 6th generation) Magnet/Hall Effect Sensors 1 of 2 (page 253)

Copyright © 2021 Apple Inc. All Rights Reserved.

- iPad (5th and 6th generation) Magnet/Hall Effect Sensors 2 of 2 (page 254)
- iPad Pro (9.7-inch) Magnet/Hall Effect Sensors 1 of 2 (page 257)
- iPad Pro (9.7-inch) Magnet/Hall Effect Sensors 2 of 2 (page 258)
- iPad Pro (12.9-inch) 1st Generation Magnet/Hall Effect Sensors 1 of 2 (page 261)
- iPad Pro (12.9-inch) 1st Generation Magnet/Hall Effect Sensors 2 of 2 (page 262)
- iPad mini 4 Magnet/Hall Effect Sensors (page 265)

2021-04-23 | Copyright © 2021 Apple Inc. All Rights Reserved.

7. Screen Overlays

The touch interface in a device senses the presence of one or more fingers on its surface. Any material between the surface and the user's hand, even a very thin sheet of plastic, may affect the performance of the touch interface.

7.1 Product Design

The screen overlay shall not degrade the performance of Multi-Touch or Apple Pencil.

The screen overlay thickness should not exceed 0.1 mm for devices supporting Apple Pencil.

The screen overlay thickness should not exceed 0.3 mm for all other devices.

Additionally, screen overlays shall not:

- Introduce air gaps between the touchscreen and overlay.
- Be electrically conductive.

7.2 Edge Swipe and Edge Press Gestures

See Edge Swipe Gestures (page 26) and Edge Press Gestures (page 26).

2021-04-23 | Copyright © 2021 Apple Inc. All Rights Reserved.

8. Camera Attachments

This chapter is applicable to accessories that intentionally alter the images captured by device cameras.

8.1 Magnetic Interference

Accessory camera attachments shall not interfere with the device's:

- Magnetic compass.
- Rear camera autofocus.
- Rear camera optical image stabilization (OIS), if present.

See Magnetic Interference (page 19) for additional details.

Copyright © 2021 Apple Inc. All Rights Reserved.

9. Adapters

An adapter accessory is a dongle or a Captured Cable (page 16) that enables connections between physically incompatible devices and accessories.

Unless otherwise specified, accessories may integrate one or more adapter components as well as other accessory features to create more advanced multi-port adapters. For example, a Lightning or USB-C adapter may support audio, power, external storage, media controls, app communication, and more.

See the Accessory Interface Specification (page 16) for more information.

9.1 Headset Adapters (Lightning to 3.5 mm)

Lightning to 3.5 mm headset adapters are accessories that enable 3.5 mm audio connections.

See the Accessory Interface Specification (page 16) for more information.

9.2 USB-A/USB-C to Lightning Headset Adapters

USB-A to Lightning or USB-C to Lightning headset adapters are accessories that integrate a Lightning Receptacle (C37) to support Lightning headsets, speakers, and microphones.

See the Accessory Interface Specification (page 16) for more information.

9.3 Ethernet Adapters (Lightning to RJ45)

A Lightning to Ethernet adapter is an accessory that enables a device to access a wired network. The Apple USB Ethernet Adapter is an example of a similar accessory for a Mac.

See the Accessory Interface Specification (page 16) for more information.

Copyright © 2021 Apple Inc. All Rights Reserved.

9.4 Lightning to USB Micro-B Adapters

Figure 9-1 Lightning to USB Micro-B Adapter

Lightning to USB Micro-B adapters are Lightning dongle accessories that function exactly like the Apple Lightning to USB Micro-B Adapter and shall consist of:

- Lightning connector.
- USB Micro-B receptacle.

See the Accessory Interface Specification (page 16) for more information.

Copyright © 2021 Apple Inc. All Rights Reserved.

10. AC Power Adapters

AC power adapters convert AC "mains" power to DC for the purpose of providing power to a device. They may provide power via one or more of the following:

- USB-C Receptacle (page 163) combined with a USB-C to Lightning cable.
- USB-A Receptacle (page 160) combined with a USB-A to Lightning cable.
- Device Power (Inductive) (page 83).

10.1 Converter Switching Frequencies

Device touchscreen or audio functionality may be degraded if converter switching frequencies do not meet the following requirements:

- Under loads greater than 5 mA, converter switching frequencies shall be above 22 kHz.
- Under loads greater than 20 mA, converter switching frequencies:
  - Shall be above 60 kHz.
  - Should be above 450 kHz.

10.2 YCAP AC Capacitor

AC power adapters should include a YCAP AC capacitor (up to 1000 pF) between the primary and secondary sections of the adapter's transformer to reduce common-mode noise at switching frequencies. These frequencies or their harmonics can interfere with device touchscreen sensors.

10.3 Impedance Stability

AC power adapter series impedance should not change abruptly. Sudden changes in impedance may cause touchscreen sensor output oscillations.

Bridge diodes used in full-wave bridge rectifiers can be a major source of abrupt changes in the series impedance. If the bridge diodes have large inherent reverse capacitance (greater than 100 pF), then the net impedance change due to diode switching may be acceptably small. However, diode reverse capacitance may decrease in more compact IC designs due to decreased chip area.

Copyright © 2021 Apple Inc. All Rights Reserved.

Impedance of bridge diodes with unacceptably low reverse capacitance can be stabilized using the example circuit shown in Figure 10-1 (page 57) and Table 10-1 (page 57). In this example, capacitors C1, C2, C3, and C4 have been placed in parallel with diodes D1, D2, D3, and D4 to stabilize the bridge impedance. Their values are larger than the inherent reverse capacitances of the diodes.

Resistors R1, R2, R3, and R4 are optional; if included, they can block noise at very high frequencies, which can help with EMI compatibility. The recommended values of R1, R2, R3, and R4 in Table 10-1 (page 57) were chosen to have trivial levels of impedance relative to the impedances of C1, C2, C3, and C4 at power line frequencies.

Figure 10-1 Typical AC power adapter diode bridge circuit

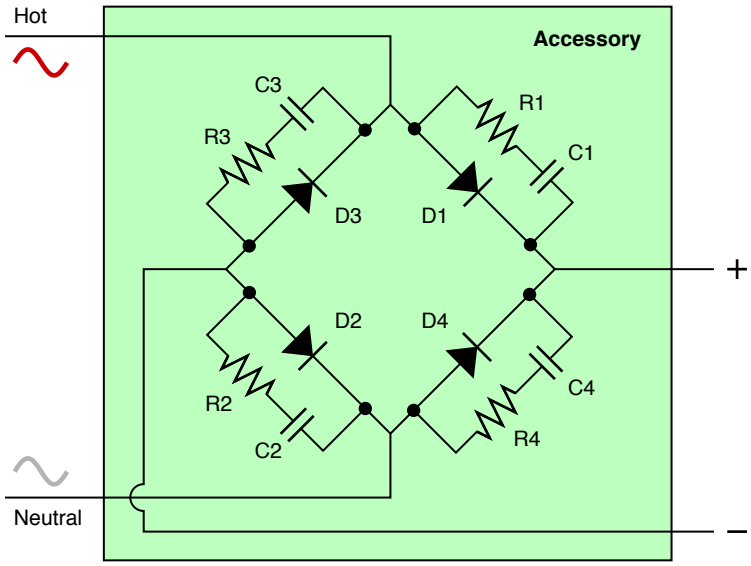

Table 10-1 Typical component values for an AC power adapter diode bridge circuit

Component	Value
C1, C2, C3, C4	47 pF
R1, R2, R3, R4	2 kΩ

10.4 Fuse Protection

A fuse should be present at the input of the AC power adapter to protect it under any fault condition.

Copyright © 2021 Apple Inc. All Rights Reserved.

10.5 Short Circuit Response

The output of the AC power adapter should drop or fold back without any resulting damage if its output is shorted to the secondary common (less than 10 mΩ).

Copyright © 2021 Apple Inc. All Rights Reserved.

11. Battery Packs

A battery pack is an accessory that is designed to provide power to the device from an internal power supply.

The battery pack may provide power via one or more of the following:

- USB-C Receptacle (page 163) combined with a USB-C to Lightning cable.
- USB-A Receptacle (page 160) combined with a USB-A to Lightning cable.
- Device Power (Inductive) (page 83).

2021-04-23 | Copyright © 2021 Apple Inc. All Rights Reserved.

12. Strobes

Strobe accessories replace a device's integrated flash when capturing a still image from either the front or rear-facing cameras. Photographers can use such accessories to control scene lighting for creative purposes.

Strobes are:

- Compatible with all iOS camera applications.
- Synchronized with the iPhone camera via the Lightning connector.

Figure 12-1 Integrated flash [L] vs. integrated flash and accessory strobe [R] example

The following devices support strobe accessories:

- iPhone 12 Pro Max
- iPhone 12 Pro
- iPhone 12

2021-04-23 | Copyright © 2021 Apple Inc. All Rights Reserved.

- iPhone 12 mini
- iPhone SE (2nd generation)
- iPhone 11 Pro Max
- iPhone 11 Pro
- iPhone 11

This feature is supported on iOS 14.0 or later.

See the Accessory Interface Specification (page 16) for more information.

Copyright © 2021 Apple Inc. All Rights Reserved.

13. AirPods Accessories

Apple AirPods accessories shall not interfere with their operation.

Relevant keep-out regions can be found in the device dimensional drawings, see:

- AirPods Pro (page 300).
- AirPods (page 301).

13.1 Charging Case Covers

Apple AirPods charging case covers shall not interfere with their operation.

Relevant keep-out regions can be found in the device dimensional drawings, see:

- AirPods Pro Wireless Charging Case (page 298).
- AirPods Wireless Charging Case (page 299).

Charging case covers should have a uniform maximum thickness of 1.0 mm across the metal keep-out region to avoid impacting wireless charging performance.

13.2 Chargers

Apple AirPods charging accessories shall be physically compatible with AirPods and AirPods Pro charging cases.

Charging accessories with an integrated:

- Lightning connector shall meet the requirements for iPhone/iPod in Device Power (Lightning) (page 78).
- Qi transmitter shall meet the requirements in Device Power (Inductive) (page 83).

Copyright © 2021 Apple Inc. All Rights Reserved.

14. Watch Bands

A well-designed band will securely attach to Apple Watch while not interfering with its operation. See Device Dimensional Drawings (page 167) for Apple Watch dimensional drawings with defined keep-out zones.

14.1 Requirements

Bands for Apple Watch shall integrate two lugs that mate with the Apple Watch Band Interface (page 65). Apple Watch uses a high precision interface profile, see https://developer.apple.com/watch/bands/ for a sample 2D lug profile. Lugs should lock into the band mating slot with a 'lug latch' feature that prevents accidental removal of the band.

Exposed edges of bands and lugs shall pass UL 1439 tests for sharpness of edges on equipment and BS EN 71-1:2014, *Safety of Toys - Mechanical and physical properties*.

The lug latch shall never become jammed in the extended position.

Bands shall not integrate magnetic chargers.

Bands and lugs should:

- Pass a 72 hour salt mist test as specified in ASTM B117 with no visible corrosion.
- Resist a 5-20 kgf lateral slide-out force when installed in Apple Watch.
- Resist a 20 kgf or greater pull force as specified in ISO-6245:1996, *Specifications for Diver's Watches*, section 7.3.
- Detach easily from Apple Watch when the band release buttons are pressed.
- Take into account the weight of Apple Watch.

Bands shall not prevent the user's skin from maintaining direct contact with the Apple Watch heart sensors and back of Apple Watch, and shall incorporate sufficient margin to compensate for shifting or dimensional changes of the band material. Failure to do so may interfere with Apple Watch wrist detect and Apple Pay features. Bands should:

- Have length sizing adjustment pitch of less than 7 mm (center to center).
- Provide sufficient adjustability for the user to achieve a snug, yet comfortable, fit that prevents movement of Apple Watch relative to skin.

Copyright © 2021 Apple Inc. All Rights Reserved.

Bands intended for use during exercise should maintain a snug fit through a full range of motion to maintain compatibility with Apple Watch heart sensors.

Apple recommends the following materials for lug bodies:
- 75 Shore A silicone.
- 50-55% glass-filled nylon.
- 240-270HV 316L / EN 1.4435 stainless steel.

Apple recommends the following materials for lug latches:
- 50-55% glass-filled nylon.
- 240-270HV 316L / EN 1.4435 stainless steel.

Bands for Apple Watch shall comply with applicable environmental regulations in the regions in which such bands are to be sold, and any applicable substance or material restrictions, including applicable restrictions on the following substances:
- Organic tin compounds, PFOS, PFOA, phthalates, azo dyes, polybrominated biphenyls (PBBs) and PAHs, per requirements of the EU REACh regulation EC 1907/2006.
- Nickel leach rate on surfaces in prolonged skin contact, per requirements of the EU REACh regulation EC 1907/2006.
- Cadmium, lead, hexavalent chromium, and nickel, per requirements of EU Directive 2009/48/EC.
- Natural rubber latex, per requirements of EU Directive EC 93/42/EEC.
- Dimethylfumarate (DMFu), per requirements of EU Regulation 412/2012.
- pH and Formaldehyde, per requirements of China GB 18401 for textiles and China GB 20400 for leather.
- Endangered species of flora and fauna in products or packaging (US Lacey Act).
- Polybrominated diphenyl ethers (PBDE).

2021-04-23 | Copyright © 2021 Apple Inc. All Rights Reserved.

14.2 Apple Watch Band Interface

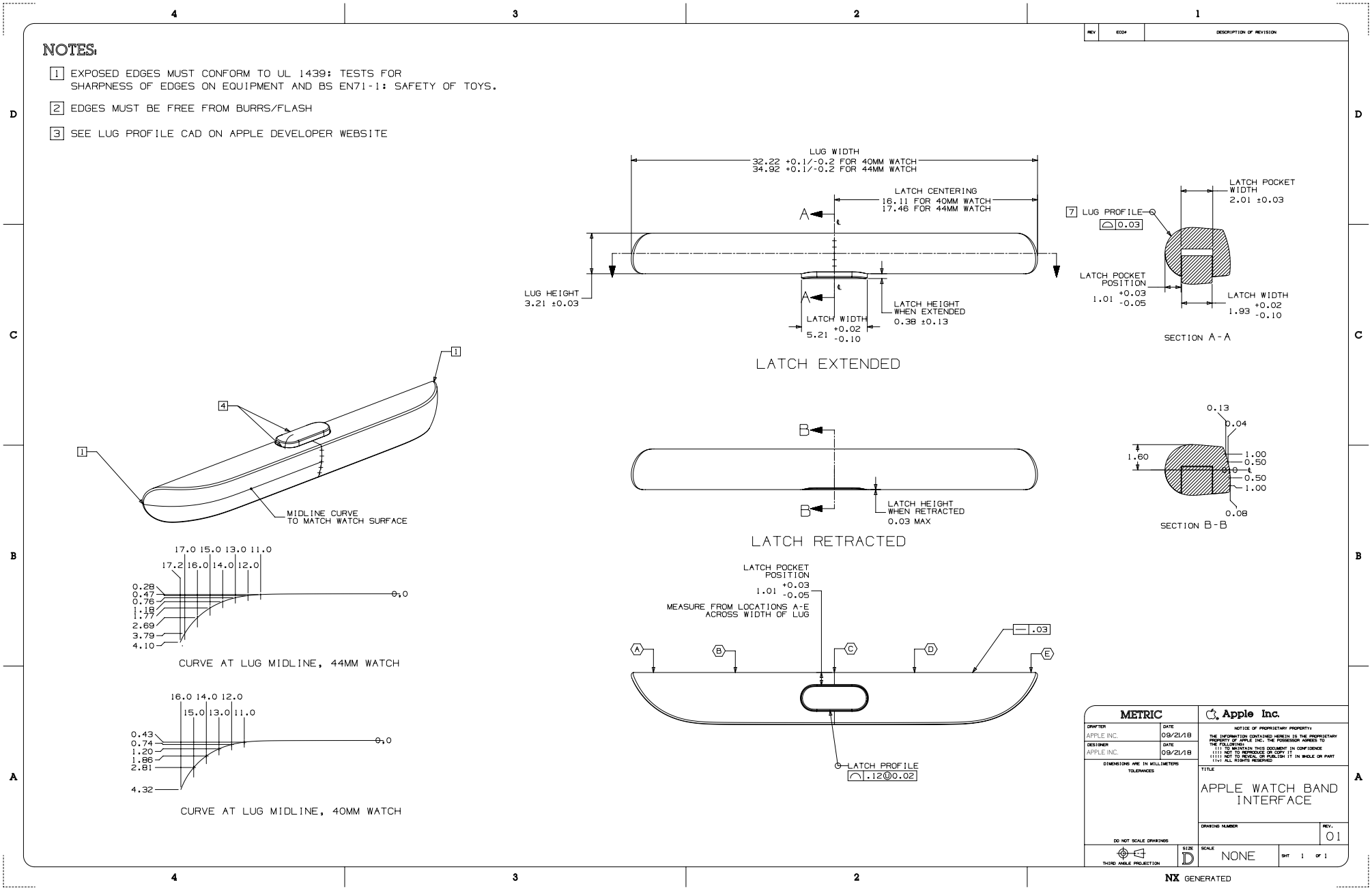

14.3 Example Apple Watch Lug Assembly

These assembly instructions are based on Example Apple Watch Lug (page 68) and an assembly fixture with a clamping mechanism.

Proper assembly of the lug is critical to ensure the band securely attaches to the Apple Watch. Improper assembly may result in damage to the Apple Watch and/or the band.

Screw threads should be secured with Loctite 435. Screws that have been previously installed/used should not be reused.

The assembly fixture should hold the lug assembly in place and a clamping mechanism should compress the lug during screw insertion.

Assemble the band and lug as follows, see Figure 14-1 (page 67).

1. Lightly insert the long end of the female pin in the band until hard stop. Ensure there is no warping or damage in the band.
2. Lightly insert the long end of the male pin in the other side of the band until it interlocks with the female pin and both pins are seated together. Ensure there is no warping or damage in the band.
3. Align the holes on the bottom of the lug with the exposed ends of the female and male pins. Note lug latch top/bottom orientation relative to band. Latch shall be on the side of the band against the wrist.
4. Apply Loctite 435 to screw threads.
5. Install both screws using the following specification:
   - Torque: 1.1 kgf-cm ±10%
   - RPM: 120 ±10%
6. Inspect for screw proudness and cross-threading visually at 1200-1400 lux.
7. Ensure screw is just sub-flush to the lowest part of the counterbore and appears parallel to the long axis of the lug.
8. Ensure screw is flat and concentric with the counterbore, without damage.

2021-04-23 | Copyright © 2021 Apple Inc. All Rights Reserved.

Figure 14-1 Apple Watch Lug Assembly Fixture

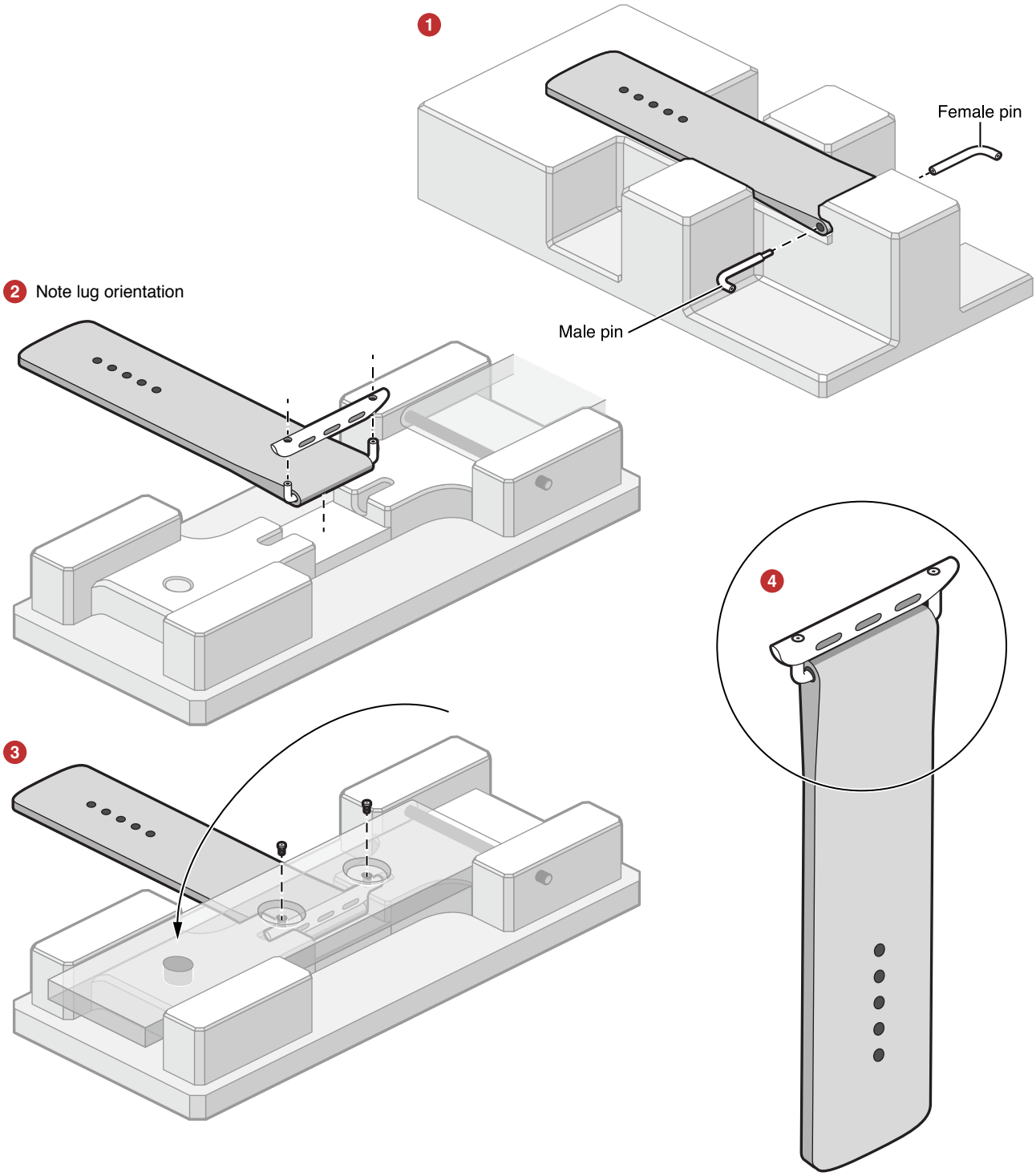

Copyright © 2021 Apple Inc. All Rights Reserved.

14.4 Example Apple Watch Lug

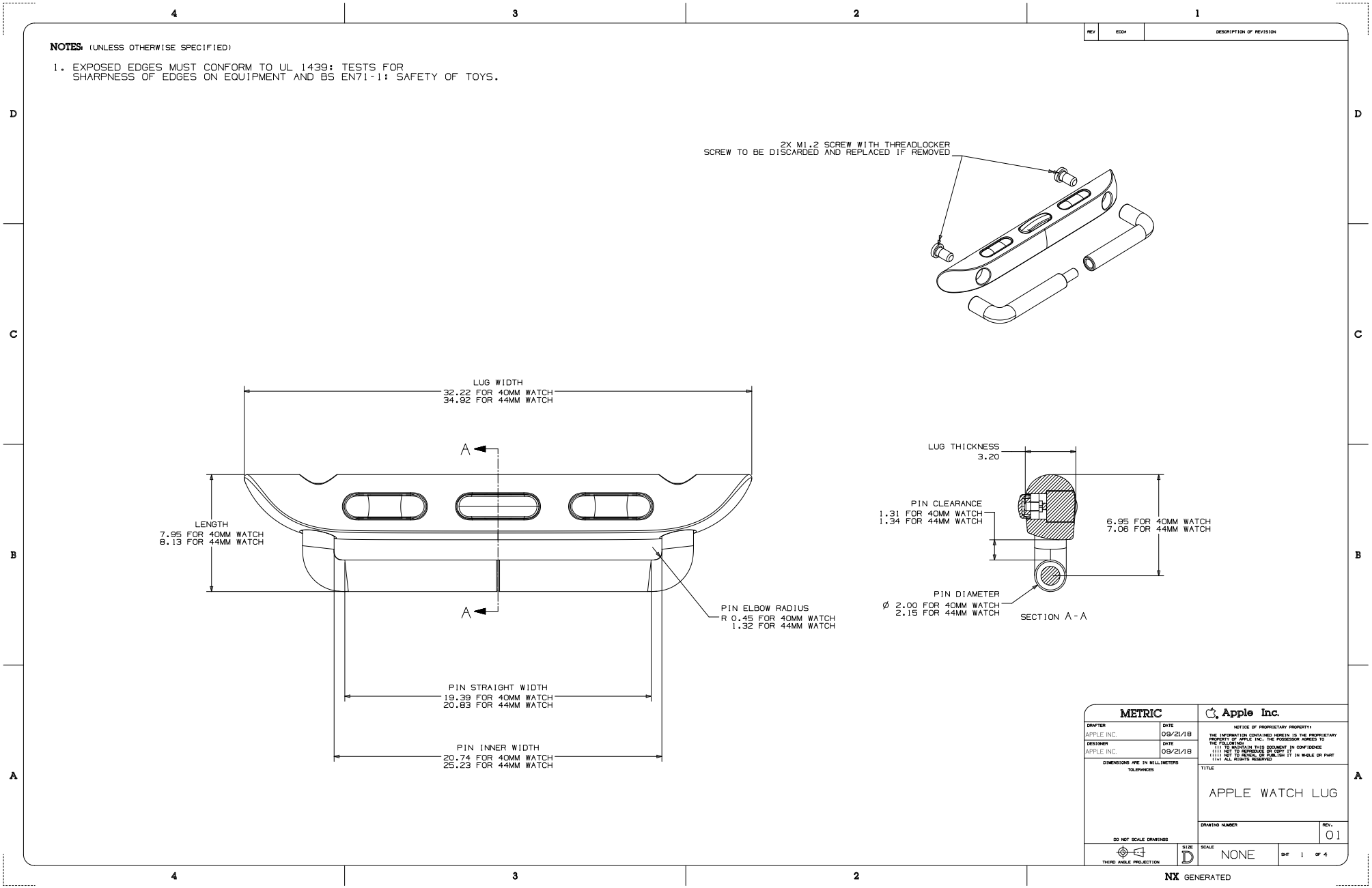

Features

15. Bluetooth Accessory Identification

This chapter describes Apple-specific Bluetooth commands that extend accessory capabilities beyond those supported by standard Bluetooth profiles.

To enable Apple-specific features, the accessory shall support HFP Command AT+XAPL (page 70), which provides accurate information about the accessory's supported features. The device will use the information sent by this command to enable and disable custom commands.

The accessory shall send the following AT+XAPL command after making a successful HFP Service Level Connection (SLC) to the device. The accessory should send an AT+XAPL command first, before sending any additional Apple-specific commands. See Siri (page 108) and Bluetooth Headset Battery Level Indication (page 77).

15.1 HFP Command AT+XAPL

Description: Enables custom AT commands from an accessory.

Initiator: Bluetooth accessory

Format: AT+XAPL=*vendorID*-*productID*-*version*,*features*

Parameters:

- *vendorID*: A string representation of the hex value of the vendor ID from the manufacturer, without the `0x` prefix.
- *productID*: A string representation of the hex value of the product ID from the manufacturer, without the `0x` prefix.
- *version*: The revision of the software.
- *features*: A base-10 representation of a bit field. Available features are:
  - Bit 0 = reserved
  - Bit 1 = The accessory supports battery reporting (reserved only for battery operated accessories).
  - Bit 2 = The accessory is docked or powered (reserved only for battery operated accessories).
  - Bit 3 = The accessory supports Siri status reporting.
  - Bit 4 = the accessory supports noise reduction (NR) status reporting.
  - All other values are reserved.

Example: AT+XAPL=ABCD-1234-0100,10 (Supports battery reporting and Siri status)

Copyright © 2021 Apple Inc. All Rights Reserved.

Response: +XAPL=iPhone,*features*

Copyright © 2021 Apple Inc. All Rights Reserved.

16. Accessory Power (Lightning)

Accessories may draw a limited amount of power from a device and avoid the need to integrate a battery or connect to an external power source. This feature may eliminate the need for users to manage an additional accessory battery and permits the accessory to function as long as the device has power.

Accessories that temporarily connect to the device are good candidates for this feature. Additionally, the accessory should integrate the Lightning Receptacle (C37) and implement Lightning Receptacle (C37) Passthrough Power so users can charge the device from an external power source while the accessory is attached.

See the Accessory Interface Specification (page 16) for more information.

2021-04-23 | Copyright © 2021 Apple Inc. All Rights Reserved.

17. App Discovery

The App Discovery feature enables accessories to retrieve a list of installed apps on the device that can communicate with the accessory. See App Launch (page 74) to make use of the list.

See the Accessory Interface Specification (page 16) for more information.

2021-04-23 | Copyright © 2021 Apple Inc. All Rights Reserved.

18. App Launch

An accessory that supports the App Launch feature can request that a device launch an app on its behalf.

Figure 18-1 App Launch Alert

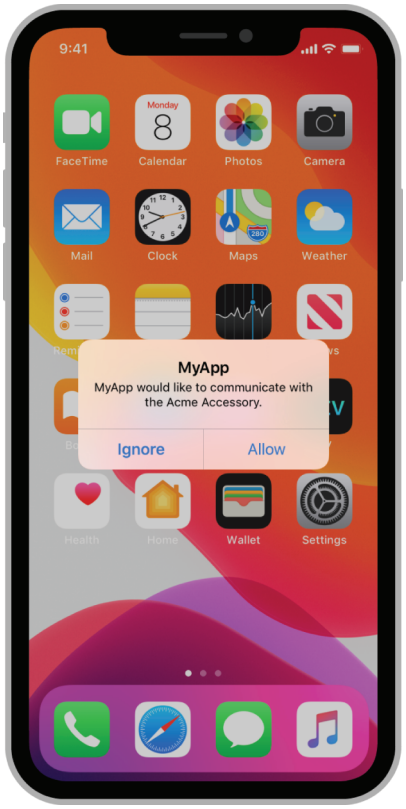

See the Accessory Interface Specification (page 16) for more information.

19. App Match

The App Match feature enables accessories that support the External Accessory Protocol feature to match with compatible apps on the App Store.

When connected for the first time, the device will ask the user if they would like to visit the App Store and view apps that work with the accessory. Subsequently, this action may be repeated by the user via *Settings* > *General* > *About* > '*Accessory Name*' > '*Find App for this Accessory*'.

Matched apps are listed in alphabetical order with one exception. If the accessory will work with apps from multiple development teams/companies, the accessory may provide a preferred Team ID that places apps from that development team at the top of the list.

Figure 19-1 App Match Alert

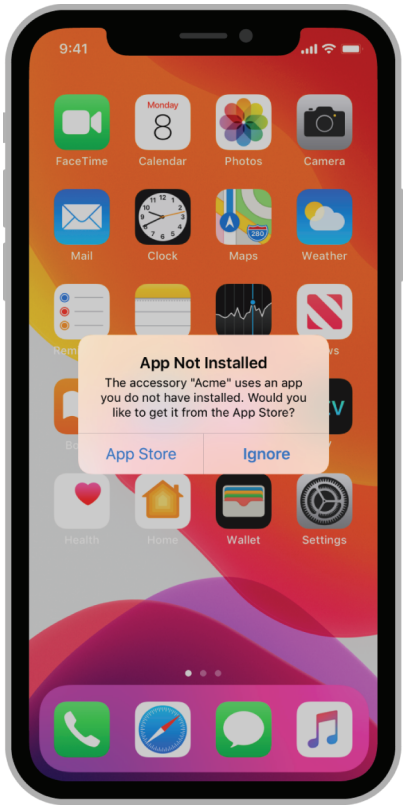

Copyright © 2021 Apple Inc. All Rights Reserved.

See the Accessory Interface Specification (page 16) for more information.

2021-04-23 | Copyright © 2021 Apple Inc. All Rights Reserved.

20. Bluetooth Headset Battery Level Indication

Any Hands-Free Bluetooth headset accessory can show its battery level to the user as an indicator icon in the device status bar. This feature is supported on all devices that support the Hands-Free Profile, including iPhone, iPod touch, and iPad.

Headset battery indication is implemented by two Apple-specific Bluetooth HFP AT commands, HFP Command AT+XAPL (page 70) and HFP Command AT+IPHONEACCEV (page 77)

20.1 HFP Command AT+IPHONEACCEV

Description: Reports a headset state change.

Initiator: Headset accessory

Format: `AT+IPHONEACCEV=`*Number of key/value pairs*`,`*key1*`,`*val1*`,`*key2*`,`*val2*`,...`

Parameters:

- *Number of key/value pairs*: The number of parameters coming next.
- *key*: the type of change being reported:
  - 1 = Battery Level
  - 2 = Dock State
- *val*: the value of the change:
  - Battery Level: string value between '`0`' and '9'
  - Dock State: `0` = undocked, 1 = docked

Example: `AT+IPHONEACCEV=1,1,3`

Copyright © 2021 Apple Inc. All Rights Reserved.

21. Device Power (Lightning)

The Device Power feature enables accessories to report their power characteristics and provide power to a device.

Apple strongly recommends providing power to the device whenever possible for the best user experience.

Accessories that provide power to a device shall connect to the device either through an integrated Lightning connector or a USB to Lightning cable. To incorporate an integrated Lightning connector, the accessory developer shall be a member of the Apple MFi licensing program. See https://developer.apple.com/programs/mfi for further information.

Accessories that provide power to a device shall either:

- Provide direct power, see Direct Power Source (page 78).
- Manage power from external sources, see External Power Source (page 78).

All accessories that do not have the potential for data communication with the device shall provide direct power to the device, see Direct Power Source (page 78).

21.1 Direct Power Source

Accessories that provide power directly shall provide power at all times unless a direct user action is taken to put the accessory into an 'off' state. Failure to provide power at all times may result in the accessory being unable to charge a device whose battery level is too low for the device to boot.

All accessory power source testing shall be performed with programmable loads, not devices. Device power draw varies with environmental factors.

21.2 External Power Source

Accessories that draw power from external power sources and provide all or a portion of that power to the device shall identify the power source's capability and report accordingly to the device.

Copyright © 2021 Apple Inc. All Rights Reserved.

> **Note:**
> Accessories shall not manipulate a device into drawing more power from the external power source than the device would normally draw when directly connected to the external power source.
>
> Accessories shall not manipulate a device into drawing less than the minimum power required by the accessory compatibility claims if it is available from the external source, see Providing Power via USB Connectors (page 79).

Accessories that draw power from external power sources may inform the device that power is not available or available at a reduced level (such as from an internal battery) when the user unplugs the accessory from the external power source (such as an AC power adapter or AC "mains" power outlet). Power to the device shall be restored (and the power providing capability change shall be communicated to the device) when the user re-connects the external power source.

See AC Power Adapters (page 56), Integrated USB Receptacles (page 18), and User Supplied Cables and AC Power Adapters (page 18) for additional requirements specific to external USB power supplies/cables.

21.3 Declaring Capability

If the accessory provides power via a:

- USB-A receptacle, then it shall use one of the following to declare its power providing capability:
  - USB Power Capability Vendor Request (page 127).
  - USB D+/D- Resistor Networks (page 128).
- USB-C receptacle, then:
  - It shall use one of the following to declare its power providing capability:
    - USB-C Current (page 132).
    - USB Power Delivery (page 131).
  - If the accessory does not have the potential for data communication with the device, it shall also support the *USB Battery Charging 1.2* specification.

21.4 Providing Power via USB Connectors

If the accessory connects via a USB-A receptacle, see USB-A Receptacle (page 160).

If the accessory connects via a USB-C receptacle, see USB-C Receptacle (page 163).

Copyright © 2021 Apple Inc. All Rights Reserved.

21.5 Labeling Multiple Connectors

If the accessory has multiple connectors with different device compatibilities, then the iPad-compatible connectors shall be labeled with the text 'iPad' unless it is physically impossible to connect an iPad to the iPhone/iPod compatible connectors.

21.6 Fast Charge for iPhone (20 W)

Accessories that advertise "fast charge" for iPhone (https://support.apple.com/en-us/HT208137) shall:

- Support USB Power Delivery (page 131).
- Supply at least 20 W (2.22 A at 9 V) using USB-PD.
- Claim compatibility with at least one of the following iPhone models:
  - iPhone 12 Pro Max
  - iPhone 12 Pro
  - iPhone 12
  - iPhone 12 mini
  - iPhone SE (2nd generation)
  - iPhone 11 Pro Max
  - iPhone 11 Pro
  - iPhone 11
  - iPhone XS Max
  - iPhone XS
  - iPhone XR
  - iPhone X
  - iPhone 8 Plus
  - iPhone 8

2021-04-23 | Copyright © 2021 Apple Inc. All Rights Reserved.

21.7 Overcurrent and Short Circuit Protection

Figure 21-1 Overcurrent and Short Circuit Protection

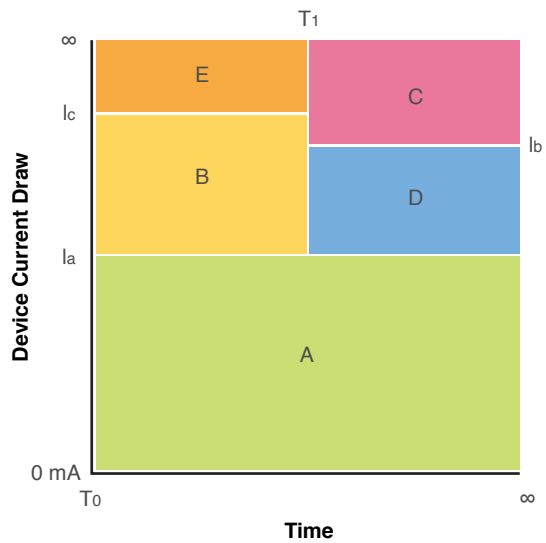

Power-providing accessories shall implement overcurrent and short circuit protection for each region in Figure 21-1 (page 81) according to Table 21-1 (page 81), Table 21-2 (page 81), and Table 21-3 (page 82).

Table 21-1 Overcurrent/Short Circuit Protection Current Thresholds

Threshold	Definition
I_a	Nominal accessory output current (i.e. 1000 mA, 2100 mA, 2400 mA, 3000 mA).
I_b	I_a + 60%.
I_c	Lowest device current draw that will cause accessory output voltage (measured at Lightning Device Power) to drop below 2 V.

Table 21-2 Overcurrent/Short Circuit Protection Time Thresholds

Threshold	Definition
T_0	Start of any device current draw transient.
T_1	Accessory overcurrent/short circuit deglitch/debounce time, shall ≥ T_0 + 1 ms.

Copyright © 2021 Apple Inc. All Rights Reserved.

Table 21-3 Overcurrent/Short Circuit Protection Behaviors

Region	Name	Accessory Behavior
A	Normal Operation	Accessory shall not limit or shutdown output current.
B	Overcurrent Transient	Accessory shall not shutdown output current. Accessory may limit output current to I_a or higher.
C	Overcurrent	Accessory shall shutdown output current.
D	Potential Overcurrent	Accessory may shutdown output current.
E	Potential Short Circuit	If Lightning Device Power voltage drops below 2 V, the accessory may trigger short circuit protection. Accessories shall not trigger short circuit protection on device current draw.

21.8 Overcurrent and Short Circuit Protection Resets

Accessory overcurrent and short circuit protection shall reset without mechanical intervention.

21.9 Power State Changes

Accessories shall not change the amount of power provided to a device unless:

- Direct user action is taken to turn the accessory on or off.
- An external power source (such as mains electricity or battery) is connected to or disconnected from the accessory.
- The accessory's internal power source (such as a battery) is depleted or loaded to the point where it is no longer capable of supplying its declared power providing capability or is now capable of supplying more power that previously declared.

2021-04-23 | Copyright © 2021 Apple Inc. All Rights Reserved.

22. Device Power (Inductive)

Accessories may provide power to devices via integration of a Qi transmitter.

The following devices support this feature:

- iPhone 12 Pro Max
- iPhone 12 Pro
- iPhone 12
- iPhone 12 mini
- iPhone SE (2nd generation)
- iPhone 11 Pro Max
- iPhone 11 Pro
- iPhone 11
- iPhone XS Max
- iPhone XS
- iPhone XR
- iPhone X
- iPhone 8 Plus
- iPhone 8

This feature is supported on iOS 11.2 or later.

22.1 Qi Wireless Power

Accessories that incorporate a Qi transmitter shall be certified according to *The Qi Wireless Power Transfer System, Power Class 0 Specification*, version 1.2.4, see https://www.wirelesspowerconsortium.com.

22.2 Electromagnetic Compatibility (EMC)

Accessories that provide inductive device power should be designed for electromagnetic compatibility.

2021-04-23 | Copyright © 2021 Apple Inc. All Rights Reserved.

Apple recommends shielding the magnetic field from the charging coil and maintaining a low impedance shield termination for cables to comply with regulatory EMC requirements for the completed product. The implementation, final compliance testing, report preparation, and labeling are the responsibility of the company marketing the product.

Cable termination is critical for reduced emissions. Cable termination and connectors should be kept away from the charging coil and cables should be routed away from the charging surface.

If emissions are present, adding clamp-on ferrites/absorbers to the cable can help reduce the emissions. The selected ferrite/absorber material should be rated for the failing frequencies.

Depending on the accessory's supported use cases, testing should be performed with the following power supplies:

- Apple USB-C Power Adapters:
  - Apple 96W USB-C Power Adapter
  - Apple 61W USB-C Power Adapter
  - Apple 30W USB-C Power Adapter
  - Apple 20W USB-C Power Adapter
- Apple USB Power Adapters:
  - Apple 12W USB Power Adapter
  - Apple 5W USB Power Adapter
    - Model A1385 (US)
    - Model A1400 (Int.)
    - Model A1552 (UK)
    - Model A1443 (China)
    - Model A1444 (Australia)
    - Model A1486 (Brazil)
    - Model A1487 (Korea)
    - Model A1501 (Argentina)
- Apple Mac computers:
  - Apple MacBook Pro
  - Apple MacBook

If different power sources are used than listed above, emission testing should be performed while those power sources are on.

In addition to the cases above, the charging device should be tested in idle mode for emissions.

Emissions tests should be conducted in accordance with standards referenced in the following:

- FCC CFR 47, Part 15
- ICES-003, Issue 5, CAN/CSA-CEI/IEC CISPR 22-10
- CISPR 22: 2008
- EN 55022: 2010

2021-04-23 | Copyright © 2021 Apple Inc. All Rights Reserved.

- AS/NZS CISPR 22:2009, TCVN 7189:2009
- VCCI V-3/2013.04
- GB 9254-2008, GB 17625.1-2012, GB 17625.2-2007, CNS 13438-2006
- CISPR 24: 2010
- EN 55024: 2010

Once the highest emissions combination is identified, complete testing should be performed on that configuration. Some regulatory domains may require EMC certification.

2021-04-23 | Copyright © 2021 Apple Inc. All Rights Reserved.

23. Location Information

The location feature provides compatible accessories with a means to provide external Global Navigation Satellite System (GNSS) information and other sensor data (like speed) in the form of National Marine Electronics Association (NMEA) sentences to devices. Devices that support this feature can take advantage of this additional information to augment their built-in location services. For example, some external Location-enabled accessories can provide more accurate or more frequent position updates. Additionally, devices can conserve power by using location information from a self-powered external accessory instead of using on-board positioning technologies.

See the Accessory Interface Specification (page 16) for more information.

2021-04-23 | Copyright © 2021 Apple Inc. All Rights Reserved.

24. MagSafe Attach

The following devices support MagSafe Attach:

- iPhone 12 Pro Max
- iPhone 12 Pro
- iPhone 12
- iPhone 12 mini

MagSafe Cases (page 23) shall:

- Claim compatibility with a MagSafe-capable device.
- Integrate a MagSafe Case Magnet Array (page 88).

Other MagSafe accessories shall:

- Claim compatibility with a MagSafe-capable device.
- Integrate a MagSafe Accessory Magnet Array (page 95).

Apple recommends the following magnet array vendors:

- Ningbo Sanhuan Magsound Industry&Trade Co., Ltd. (http://www.magsound.com)
- Phone In Mag Electronics Co., Ltd. (http://www.phonein.com.tw)
- Quadrant Solutions, Inc. (https://www.quadrant.us)

2021-04-23 | Copyright © 2021 Apple Inc. All Rights Reserved.

24.1 MagSafe Case Magnet Array

Figure 24-1 MagSafe Case Magnet Array

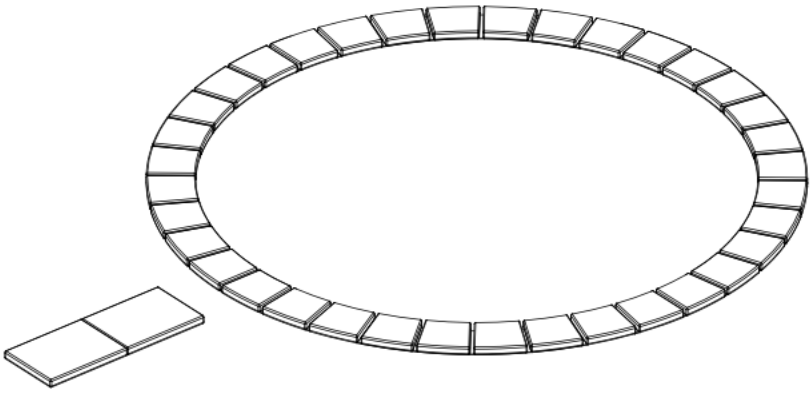

24.1.1 Product Design

All cases that integrate a MagSafe case magnet array shall:

- Enclose the device.
- Have a uniform maximum thickness of 2.1 mm. Apple recommends 2.0 mm.
- Firmly attach to the device without relying on the magnets.
- Not integrate magnets on the back of the case other than the MagSafe magnets.
- Comply with requirements for Cases (page 23).
- Work with:
  - Apple MagSafe Charger.
  - iPhone Leather Wallet.

24.1.2 Mechanical

All magnets that are part of the MagSafe case magnet array shall be positioned in the same plane.

The case and MagSafe case magnet array shall enable MagSafe accessories to magnetically self align within a 1.55 mm radial maximum.

2021-04-23 | Copyright © 2021 Apple Inc. All Rights Reserved.

24.1.2.1 Magnets

All MagSafe case magnets shall be N45SH NdFeB with a 7 µm - 13 µm NiCuNi plating finish (or similar) and shall meet the requirements in Table 24-1 (page 89).

Table 24-1 Magnet Properties

Property	Minimum	Maximum
Br	13.2 kGs	13.6 kGs
Hcb	12.75 kOe	
Hcj	20.50 kOe	
BHmax	43 MGOe	46 MGOe

24.1.2.2 Magnet Array

The magnets shall be positioned in the case following the dimensions and polarity shown in Figure 24-2 (page 90), Figure 24-3 (page 91) and Figure 24-4 (page 91).

Copyright © 2021 Apple Inc. All Rights Reserved.

Figure 24-2 MagSafe Magnet Array Dimensions

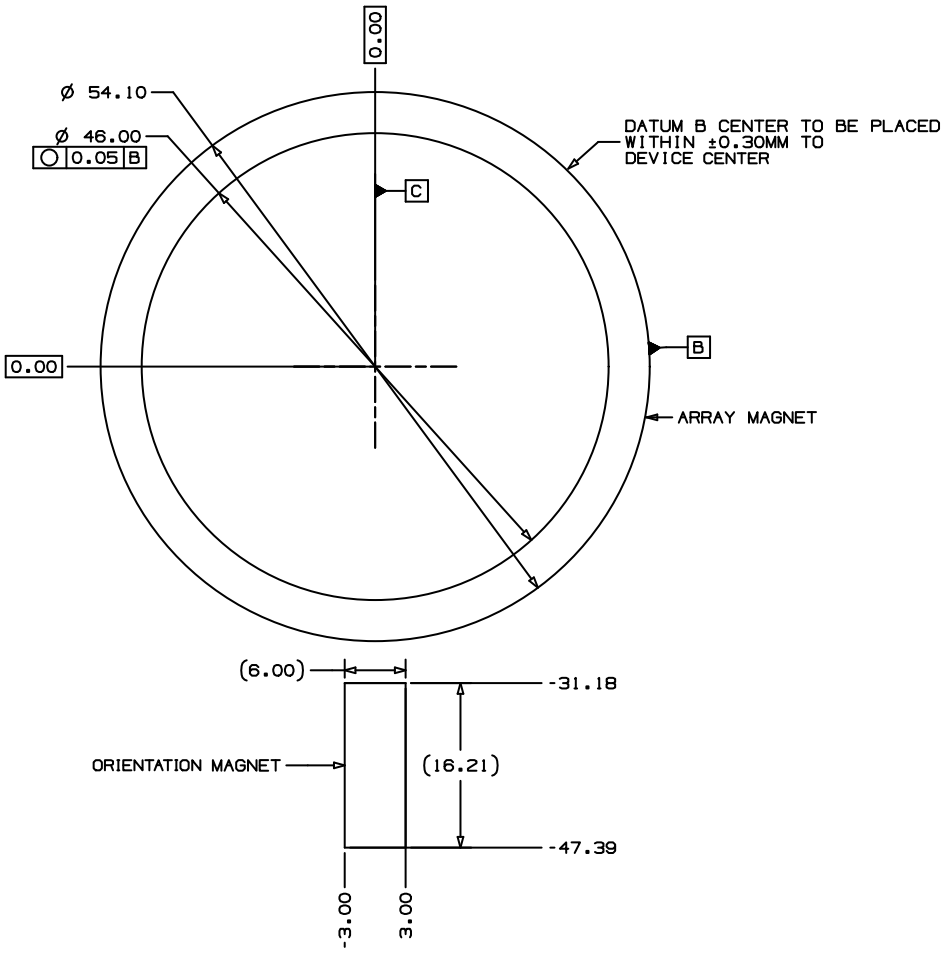

Copyright © 2021 Apple Inc. All Rights Reserved.

Figure 24-3 MagSafe Magnet Ring Dimensions and Polarity

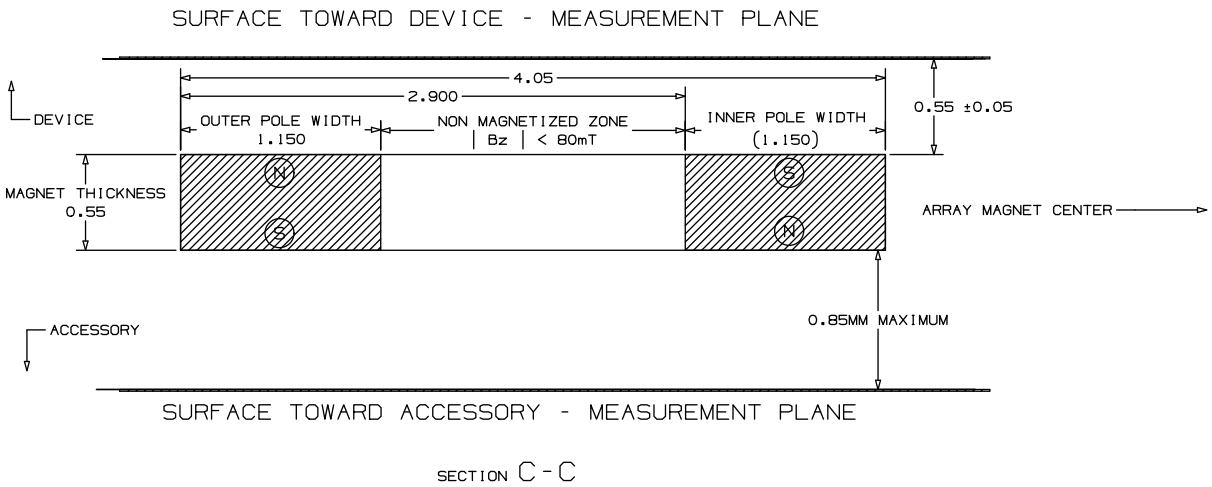

Figure 24-4 MagSafe Orientation Magnet Dimensions and Polarity

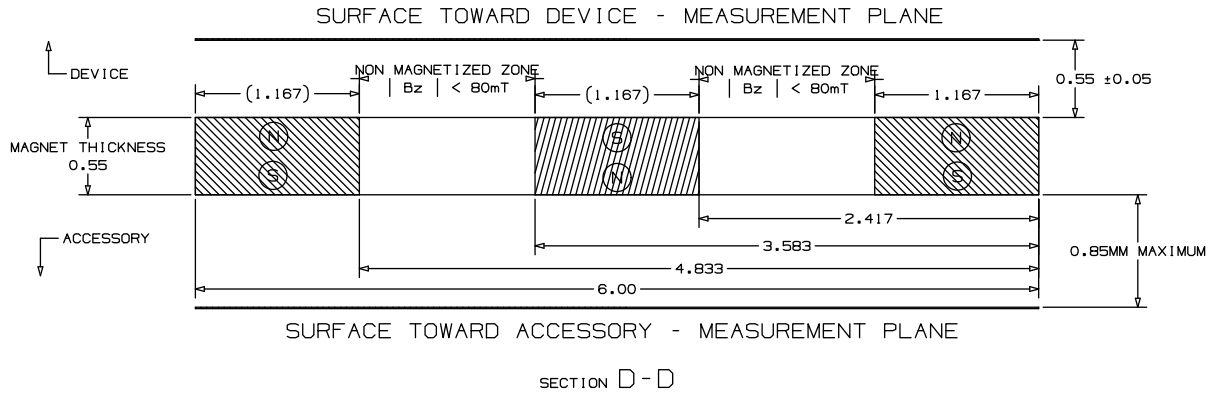

The flux density of a MagSafe case magnet ring shall comply with Table 24-2 (page 92) and Table 24-3 (page 93) across the 8 lines (S1 - S8) in Figure 24-5 (page 92).

Copyright © 2021 Apple Inc. All Rights Reserved.

Figure 24-5 MagSafe Flux Density Measurement Plane

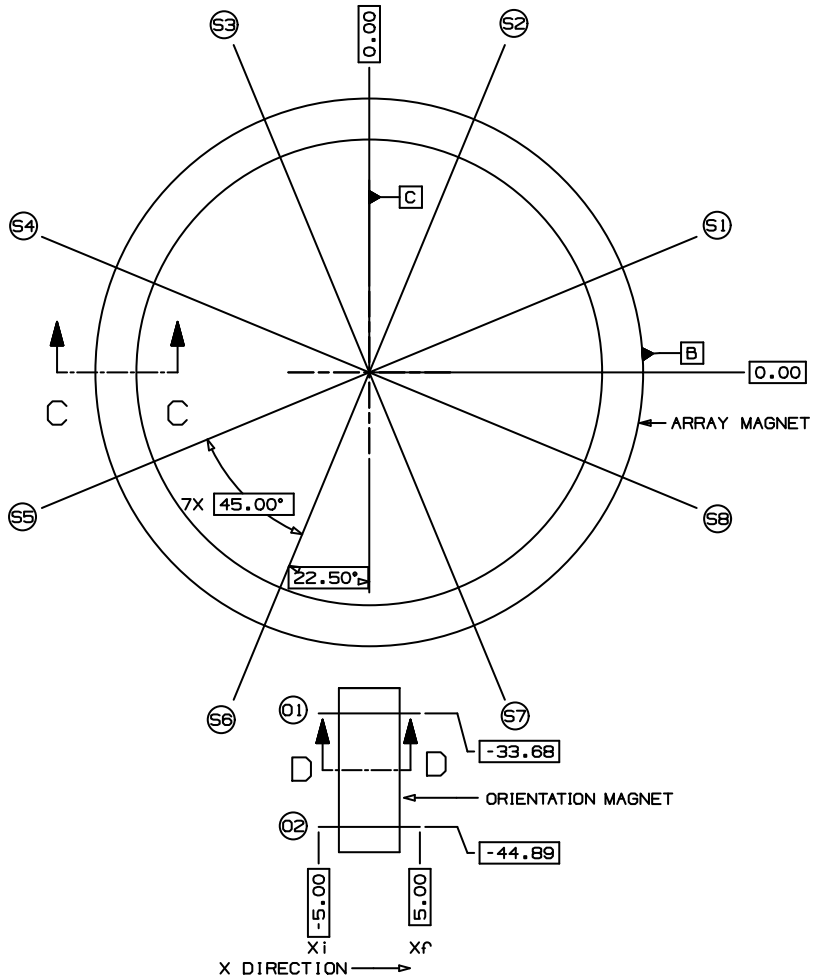

Table 24-2 Device side flux density at 0.55 mm from magnet ring surface

Minimum r	Maximum r	Minimum Bz	Maximum Bz	Minimum Bxy	Maximum Bxy
	19.5 mm	-0.020 T	0.020 T		0.025 T
19.5 mm	23 mm				0.075 T
23 mm	24 mm	-0.170 T	-0.125 T		
24 mm	26 mm			0.095 T	0.1325 T
26 mm	27 mm	0.125 T	0.170 T		

2021-04-23 | Copyright © 2021 Apple Inc. All Rights Reserved.

Minimum r	Maximum r	Minimum Bz	Maximum Bz	Minimum Bxy	Maximum Bxy
27 mm	30 mm				0.075 T
30 mm		-0.020 T	0.000 T		0.025 T

Table 24-3 Accessory side flux density at 0.80 mm from magnet ring surface

Minimum r	Maximum r	Minimum Bz	Maximum Bz	Minimum Bxy	Maximum Bxy
	19.5 mm	-0.020 T	0.020 T		0.025 T
19.5 mm	23 mm				0.065 T
23 mm	24 mm	-0.120 T	-0.085 T		
24 mm	26 mm			0.070 T	0.100 T
26 mm	27 mm	0.85 T	0.120 T		
27 mm	30 mm				0.065 T
30 mm		-0.020 T	0.000 T		0.025 T

The flux density of a MagSafe case orientation magnet shall comply with Table 24-4 (page 93) and Table 24-5 (page 94) across the 2 lines (O1 and O2) in Figure 24-5 (page 92).

Table 24-4 Device side flux density at 0.55 mm from orientation magnet surface

Minimum x	Maximum x	Minimum Bz	Maximum Bz	Minimum Bxy	Maximum Bxy
	-5.0 mm	-0.020 T	0.020 T		0.025 T
-5.0 mm	-4.5 mm	-0.020 T	0.020 T		
-4.5 mm	-2.75 mm			0.080 T	0.110 T
-2.75 mm	-2.0 mm	0.125 T	0.175 T		
-2.0 mm	-0.5 mm			0.110 T	0.155 T
-0.5 mm	0.5 mm	-0.1925 T	-0.140 T		
0.5 mm	2.0 mm			0.110 T	0.155 T
2.0 mm	2.75 mm	0.125 T	0.175 T		
2.75 mm	4.0 mm			0.080 T	0.110 T
4.0 mm	5.0 mm	-0.020 T	0.020 T		
5.0 mm		-0.020 T	0.020 T		0.025 T

2021-04-23 | Copyright © 2021 Apple Inc. All Rights Reserved.

Table 24-5 Accessory side flux density at 0.80 mm from orientation magnet surface

Minimum x	Maximum x	Minimum Bz	Maximum Bz	Minimum Bxy	Maximum Bxy
	-5.0 mm	-0.020 T	0.020 T		0.025 T
-5.0 mm	-4.5 mm	-0.020 T	0.020 T		
-4.5 mm	-2.75 mm			0.050 T	0.070 T
-2.75 mm	-2.0 mm	0.085 T	0.120 T		
-2.0 mm	-0.5 mm			0.0825 T	0.115 T
-0.5 mm	0.5 mm	-0.140 T	-0.0975 T		
0.5 mm	2.0 mm			0.0825 T	0.115 T
2.0 mm	2.75 mm	0.085 T	0.120 T		
2.75 mm	4.0 mm			0.050 T	0.070 T
4.0 mm	5.0 mm	-0.020 T	0.020 T		
5.0 mm		-0.020 T	0.020 T		0.025 T

24.1.2.3 Magnetic Force

The force normal to the back of the case that is needed to dislodge a MagSafe accessory, such as the Apple MagSafe Charger, shall meet the requirements in Table 24-6 (page 94).

Table 24-6 Magnetic force

Scenario	Minimum	Maximum
Case attached to device	800 gf	1100 gf
Case only	600 gf	900 gf

24.1.3 Magnetic Interference

All cases with an integrated MagSafe magnet array shall not interfere with:

- Device wireless charging functionality.
- Magnetic stripe cards in an attached iPhone Leather Wallet.

Copyright © 2021 Apple Inc. All Rights Reserved.

24.2 MagSafe Accessory Magnet Array

Figure 24-6 MagSafe Accessory Magnet Array Options

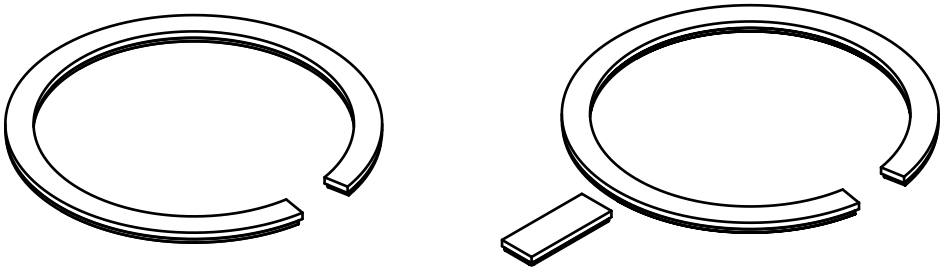

The MagSafe accessory magnet array may be implemented via a:

- Magnet Ring (page 96), enabling the device and accessory to be attached in any orientation.
- Magnet Ring (page 96) plus an Orientation Magnet (page 98), enabling the device and accessory to be attached at a specific orientation.

24.2.1 Product Design

All accessories integrating the MagSafe accessory magnet array shall not enclose the device.

24.2.2 Mechanical

All magnets that are part of the MagSafe accessory magnet array shall be positioned in the same plane.

The MagSafe accessory's Magnet Ring (page 96) shall magnetically self align to the device's magnet ring within a 1.55 mm radial maximum.

24.2.2.1 Magnets

All MagSafe accessory magnets shall be N48H NdFeB with a 7 µm - 13 µm NiCuNi plating finish (or similar) and shall meet the requirements in Table 24-7 (page 95).

Table24-7 Magnet Properties

Property	Minimum	Maximum
Br	13.7 kGs	14.1 kGs

Copyright © 2021 Apple Inc. All Rights Reserved.

Property	Minimum	Maximum
Hcb	13.25 kOe	
Hcj	17 kOe	
BHmax	45 MGOe	48 MGOe

24.2.2.2 Magnet Ring

The magnet ring shall be positioned in the accessory following the dimensions and polarity shown in Figure 24-7 (page 97) and Figure 24-8 (page 98).

Copyright © 2021 Apple Inc. All Rights Reserved.

Figure 24-7 MagSafe Magnet Ring Dimensions

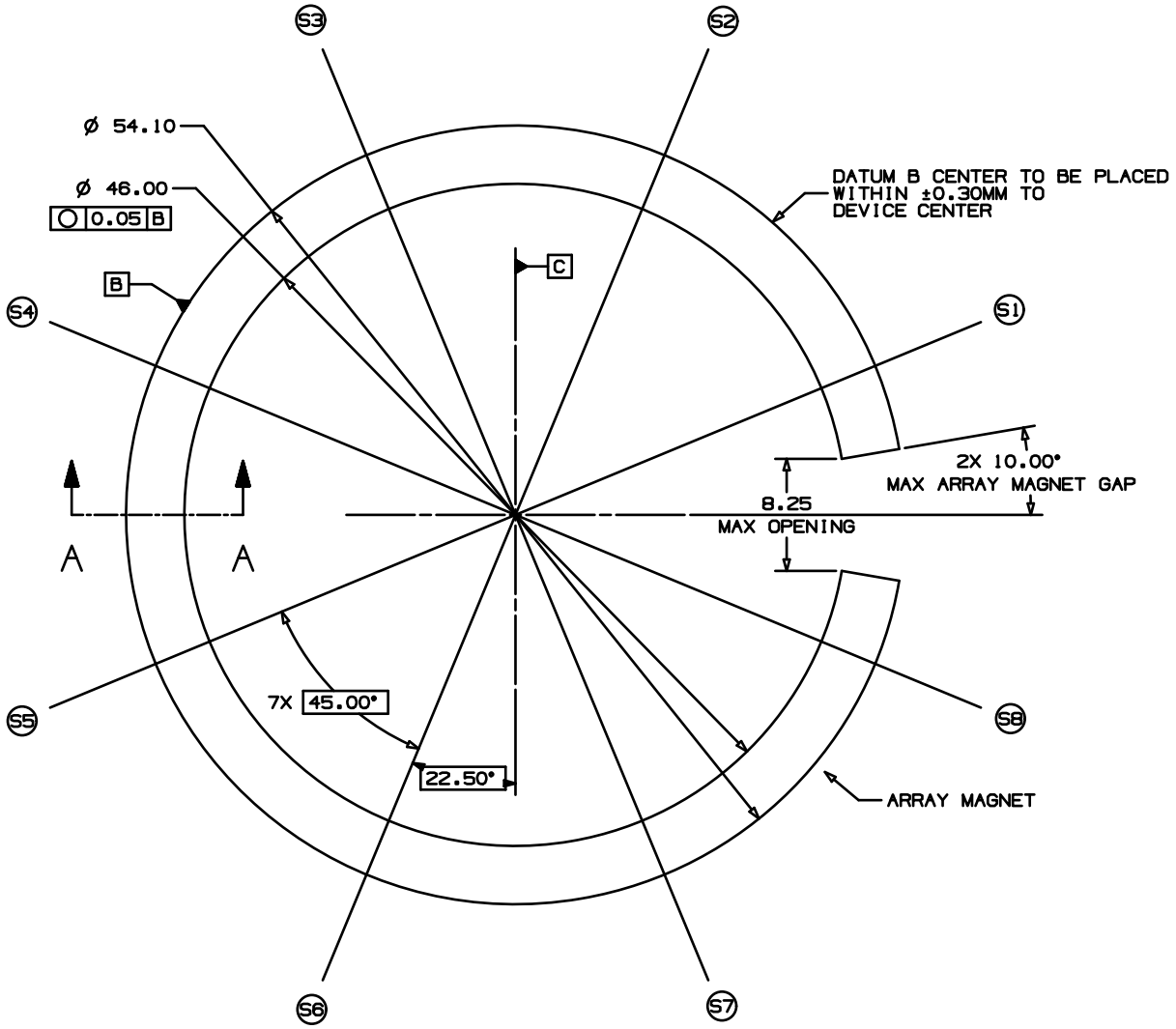

Copyright © 2021 Apple Inc. All Rights Reserved.

Figure 24-8 MagSafe Magnet Ring Dimensions and Polarity

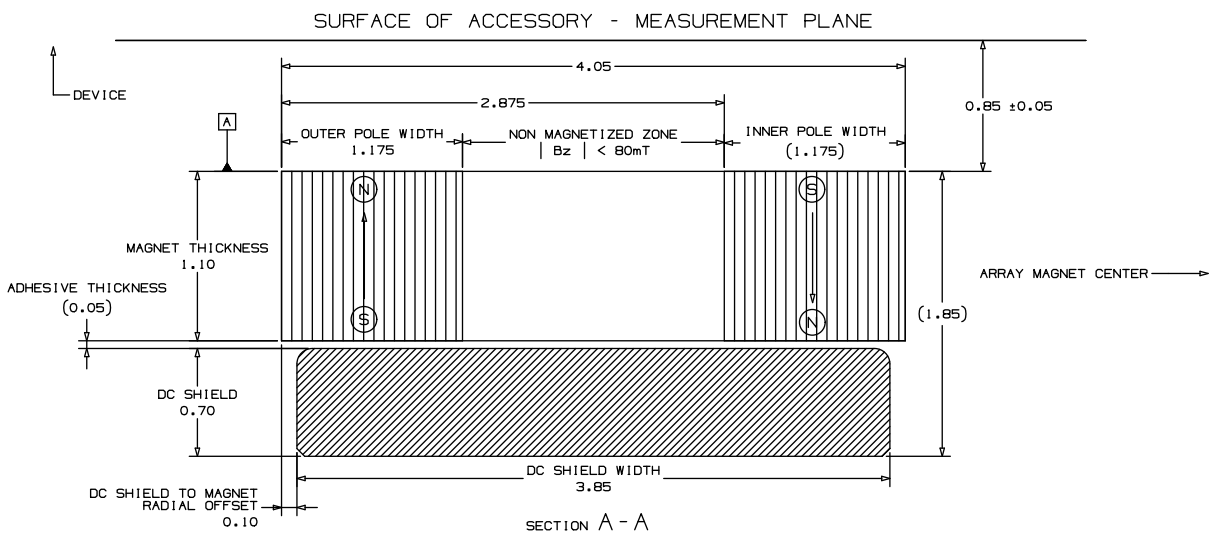

See DC Shield (page 101) for additional requirements of the DC shield specified in Figure 24-8 (page 98).

The flux density of a MagSafe accessory magnet ring shall comply with Table 24-8 (page 98) across the 8 lines (S1 - S8) in Figure 24-7 (page 97).

Table 24-8 Flux density at 0.85 mm from magnet ring surface

Minimum r	Maximum r	Minimum Bz	Maximum Bz	Minimum Bxy	Maximum Bxy
0 mm	19.5 mm	-0.025 T	0.025 T		0.025 T
19.5 mm	23 mm				0.075 T
23 mm	24.5 mm	-0.215 T	-0.155 T		
24.5 mm	25.5 mm			0.170 T	0.215 T
25.5 mm	27 mm	0.155 T	0.215 T		
27 mm	30 mm				0.075 T
30 mm		-0.025 T	0.025 T		0.025 T

24.2.2.3 Orientation Magnet

If orientation magnets are included, they shall be positioned according to Figure 24-9 (page 99) and Figure 24-10 (page 100).

Copyright © 2021 Apple Inc. All Rights Reserved.

Figure 24-9 MagSafe Orientation Magnet Dimensions

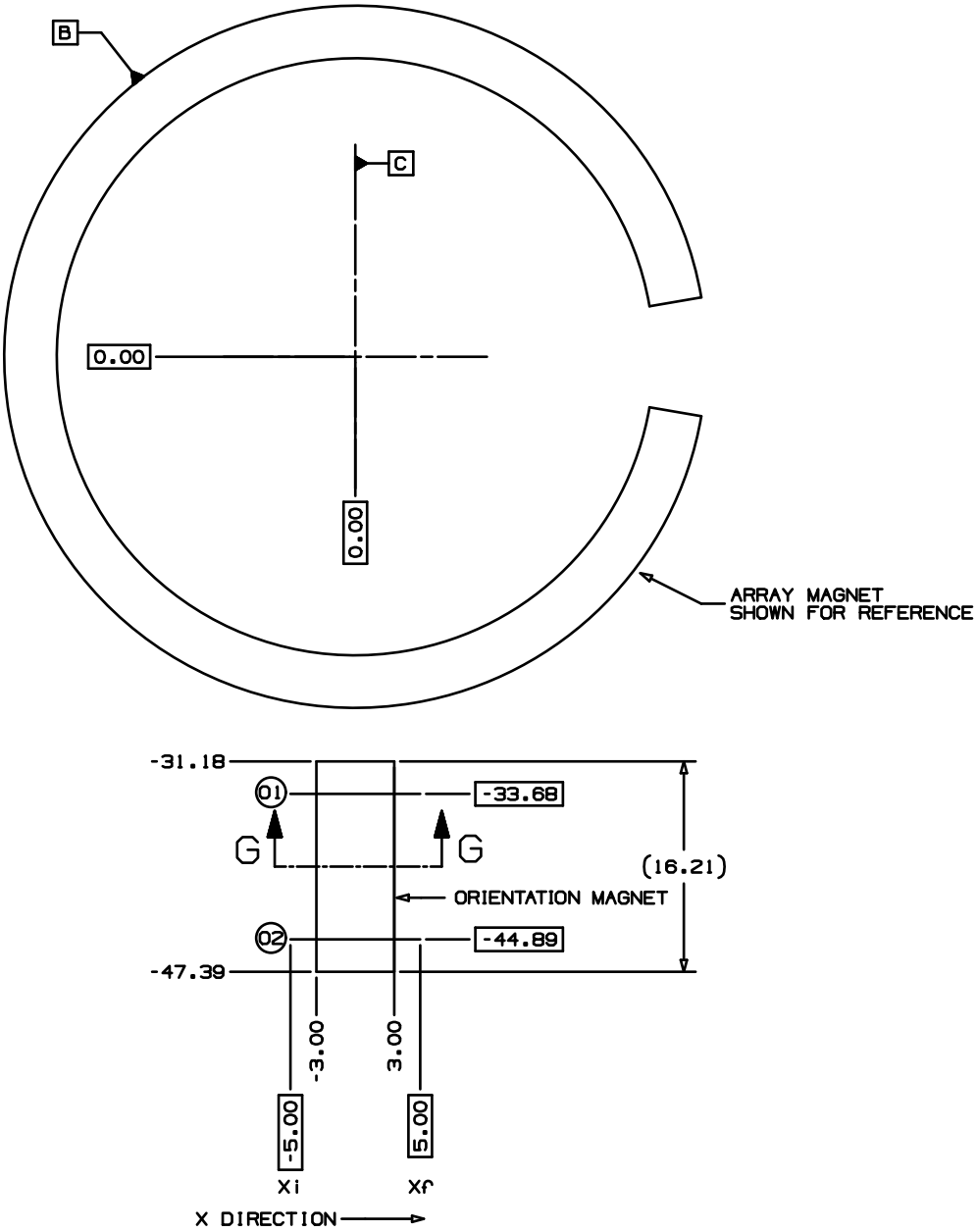

Copyright © 2021 Apple Inc. All Rights Reserved.

Figure 24-10 MagSafe Orientation Magnet Dimensions and Polarity

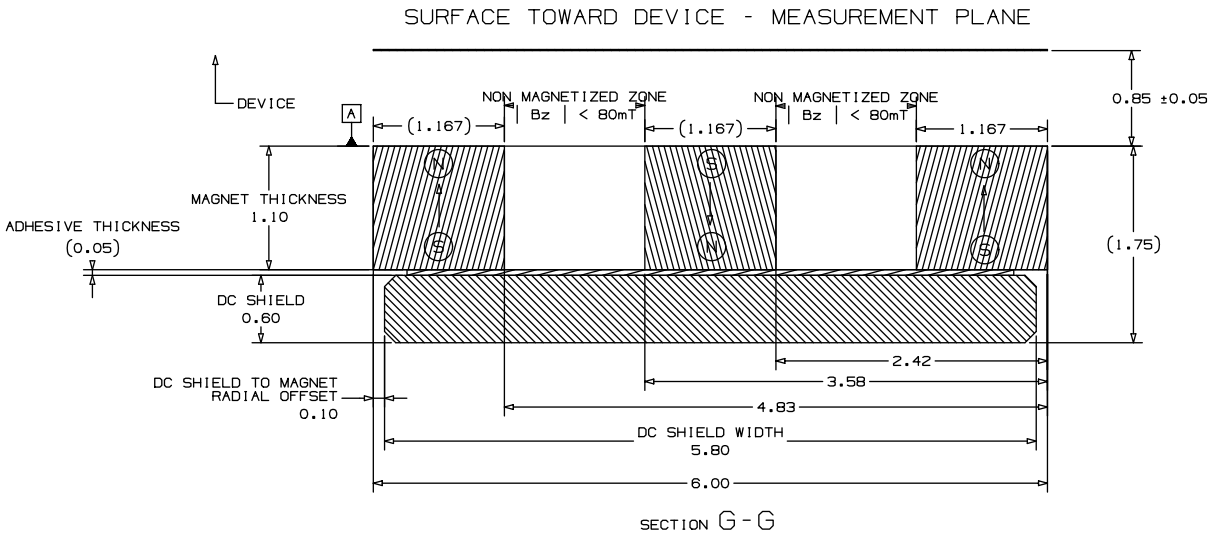

See DC Shield (page 101) for additional requirements of the DC shield specified in Figure 24-10 (page 100).

The flux density of a MagSafe accessory orientation magnet shall comply with Table 24-9 (page 100) across the 2 lines (O1 and O2) in Figure 24-9 (page 99).

Table 24-9 Flux density at 0.85 mm from orientation magnet surface

Minimum x	Maximum x	Minimum Bz	Maximum Bz	Minimum Bxy	Maximum Bxy
	-5.0 mm	-0.025 T	0.025 T		0.025 T
-5.0 mm	-4.5 mm	-0.025 T	0.025 T		
-4.5 mm	-3.0 mm			0.0625 T	0.0875 T
-3.0 mm	-2.0 mm	0.145 T	0.195 T		
-2.0 mm	-0.5 mm			0.165 T	0.215 T
-0.5 mm	0.5 mm	-0.250 T	-0.185 T		
0.5 mm	2.0 mm			0.165 T	0.215 T
2.0 mm	3.0 mm	0.145 T	0.195 T		
3.0 mm	4.0 mm			0.0625 T	0.0875 T
4.0 mm	5.0 mm	-0.025 T	0.025 T		
5.0 mm		-0.025 T	0.025 T		0.025 T

2021-04-23 | Copyright © 2021 Apple Inc. All Rights Reserved.

24.2.2.4 Magnetic Force

The force normal to the back of the device that is needed to dislodge the MagSafe accessory shall meet the requirements in Table 24-10 (page 101).

Table 24-10 Magnetic force

Scenario	Minimum	Maximum
Accessory attached to device	650 gf	900 gf

24.2.2.5 DC Shield

The DC shield shall be low carbon steel (1010, DT4 or similar), per ASTM848, with a 5 µm - 10 µm Ni plating finish or similar.

The DC shield shall have a saturation flux density (B_{sat}) of at least 2.0 T.

24.3 Test Procedures

24.3.1 MagSafe Case Magnet Array

24.3.1.1 Case Thickness

24.3.1.1.1 Equipment

- Digital thickness gauge, such as the Mitutoyo 547-520S.

24.3.1.1.2 Procedure

1. Using the digital thickness gauge, verify that the thickness is less than or equal to 2.1 mm at:
   - 4 points along the magnet ring.
   - 2 points along the orientation magnet.

24.3.1.2 Magnetic Force

24.3.1.2.1 Equipment

- MagSafe-capable device.

Copyright © 2021 Apple Inc. All Rights Reserved.

- Apple MagSafe Charger with a non-magnetic eyelet screw glued firmly to its back. Pulling on the eyelet should exert a force on the center of the charger.
- Digital force gauge with hook attachment that can capture peak values, such as the Chatillon DFX II.
- Clamps.

24.3.1.2.2 Procedure

1. Attach the case to the device.
2. Place the device on a flat level surface with the display facing down and clamp it firmly in place. See Figure 24-11 (page 103).
3. Repeat the following steps 5 times:
   a. Attach the modified Apple MagSafe Charger to the back of the case, allowing the Apple MagSafe Charger to magnetically align.
   b. Connect the force gauge hook to the eyelet. See Figure 24-11 (page 103).
   c. Reset the force gauge's peak force value.
   d. Pull the force gauge vertically until the Apple MagSafe Charger and eyelet assembly dislodge from the case.
   e. Note the peak force value displayed on the force gauge.
4. Calculate the average of the 5 peak force measurements.
5. Verify that the average force is within the range of 800 gf to 1100 gf.

2021-04-23 | Copyright © 2021 Apple Inc. All Rights Reserved.

Figure 24-11 Magnetic Force Test Setup

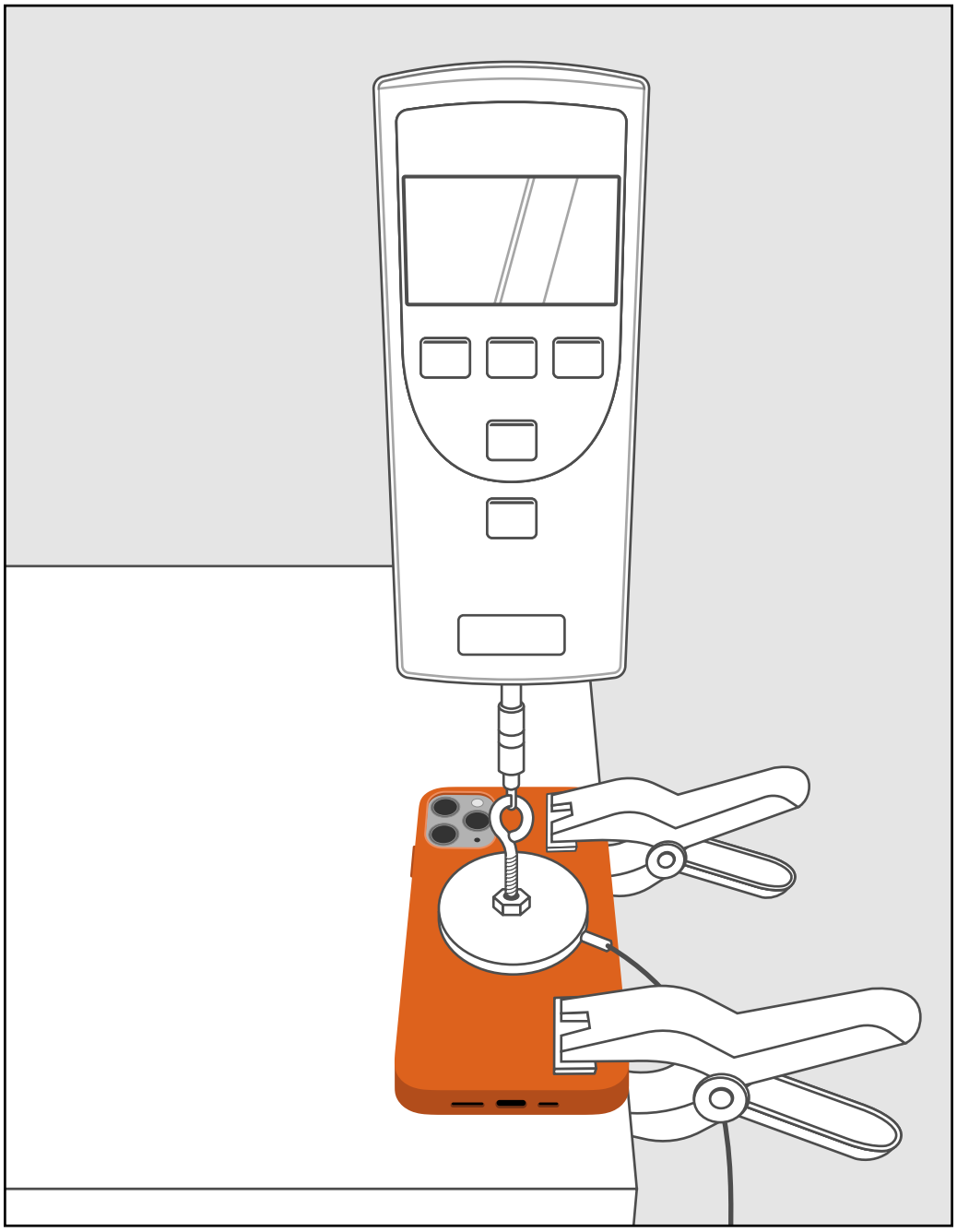

24.3.1.3 iPhone Leather Wallet Detection

24.3.1.3.1 Equipment

- MagSafe-capable device.

Copyright © 2021 Apple Inc. All Rights Reserved.

- iPhone Leather Wallet.

24.3.1.3.2 Procedure

1. Attach the case to the device.
2. Attach the iPhone Leather Wallet to the back of the case.
3. Verify that the device displays the iPhone Leather Wallet animation.

24.3.1.4 Magnetic Stripe Cards in iPhone Leather Wallet

24.3.1.4.1 Equipment

- MagSafe-capable device.
- iPhone Leather Wallet.
- Low Coercivity Magnetic stripe (LoCo) cards, such as cards from the following vendors:
  - American Card Service.
  - Allsafe.
  - CI Solutions.
  - PSA.
- LoCo card reader/writer, such as:
  - Q-card Mag3x.
  - Magtek InSpec 9000.
  - Misiri X6BT.
  - Deftun MSR605X.

24.3.1.4.2 Procedure

1. Attach the accessory to the device.
2. Repeat this procedure for 3 different brands of LoCo cards:
   a. Write to the LoCo card and confirm readability.
   b. Insert the LoCo card into the iPhone Leather Wallet with the magnetic stripe facing the magnets of the iPhone Leather Wallet.
   c. Place additional cards into the pocket to ensure LoCo card is in contact with the magnet side of the iPhone Leather Wallet.
   d. Attach the iPhone Leather Wallet to the accessory (attached to the device).
   e. Wait 10 seconds.
   f. Remove the iPhone Leather Wallet from the accessory.
   g. Remove the LoCo card from the iPhone Leather Wallet.
   h. Verify that the LoCo card can be read and that it displays the correct information.

Copyright © 2021 Apple Inc. All Rights Reserved.

25. Media Library Access

The media library feature allows accessories to download the metadata contents of a device's media libraries (not the media items themselves) and request playback of media items. The feature is divided into the following sub-features:

- Media Library Information informs the accessory about available media libraries on the device.
- Media Library Updates provide an accessory with an updated view of the contents of a particular media library.
- Media Library Playback allows the accessory to request playback of one or more items from the media library.

See the Accessory Interface Specification (page 16) for more information.

2021-04-23 | Copyright © 2021 Apple Inc. All Rights Reserved.

26. Now Playing Updates

The Now Playing feature enables an accessory to display information about the current "Now Playing" media source and media item on a device. Media sources include both the built-in Music and Video apps on devices and certain third-party iOS apps that support the generation of Now Playing metadata, see *MPNowPlayingInfoCenter* in the iOS SDK documentation. Accessories shall be prepared for the Now Playing media source and media item to change at any time, whether the accessory requested the change or not.

See the Accessory Interface Specification (page 16) for more information.

Copyright © 2021 Apple Inc. All Rights Reserved.

27. Out-of-Band Bluetooth Pairing

Accessories with the ability to connect to a device via Bluetooth and a wired transport should use the Out-of-Band Bluetooth Pairing feature to simplify Bluetooth connection setup.

For example, Lightning to USB charge/sync cables or Lightning to USB accessory cables can be used to exchange Bluetooth pairing information upon initial connection. This may reduce or eliminate the need for instruction manuals to describe how to:

- Put the accessory into a discoverable and pairable mode.
- Initiate Bluetooth pairing on the device via the Settings app.
- Download the accessory's companion app and initiate pairing from the app.

See the Accessory Interface Specification (page 16) for more information.

2021-04-23 | Copyright © 2021 Apple Inc. All Rights Reserved.

28. Siri

Siri enables a user to have rich interactions with a device by primarily using their voice.

Accessories supporting Siri shall not use an icon that resembles the Siri microphone icon.

The rest of this chapter is applicable to accessories that support Siri over Bluetooth using HFP commands.

To support Siri using other transports and protocols, the accessory developer shall be a member of the Apple MFi licensing program. See https://developer.apple.com/programs/mfi for further information.

28.1 Enabling Custom Siri Commands

Every accessory that supports Siri over Bluetooth using HFP commands shall support HFP Command AT+XAPL (page 70). The device will use the information sent by this command to enable and disable custom commands related to Siri.

To receive Siri status events, the accessory shall send the AT+XAPL command after making a successful HFP Service Level Connection (SLC) to the device. The accessory should send an AT+XAPL command first, before sending any of the additional Siri-specific commands described below.

28.2 Obtaining Siri Availability Information

After establishing an HFP profile connection, an accessory can determine if Siri is available and enabled on a device. It can also receive notifications of changes in Siri status. If Siri is disabled, Voice Control will be activated instead.

28.2.1 Obtaining Status Information at Connection

The accessory should send the following command after making a successful HFP profile (SLC) connection and sending an AT+XAPL command.

28.2.1.1 HFP Command AT+APLSIRI?

Description: AT command to retrieve Siri status information.

Copyright © 2021 Apple Inc. All Rights Reserved.

Initiator: accessory

Format: `AT+APLSIRI?`

Response: `+APLSIRI:` *value*

Defined Values:
- 0 = Siri is not available on this platform.
- 1 = Siri is available and enabled.
- 2 = Siri is available but not enabled.

Example: `+APLSIRI:1` (Siri is available and enabled)

28.2.2 Receiving Siri Availability Updates from the Device

After initialization has been completed, the device will send the accessory the following notification if there is a change in Siri status. This notification will be provided only if the accessory has requested Siri status (by sending `AT+APLSIRI?`) at least once after connection, and if the device has reported that Siri is available and enabled.

28.2.2.1 HFP Command +APLSIRI

Description: Unsolicited event indicating a change in Siri status.

Initiator: Device

Format: `+APLSIRI:` *value*

Defined Values:
- 1 = Siri is available and enabled.
- 2 = Siri is available but not enabled.

Example: `+APLSIRI:2` (Siri is available but not enabled)

Copyright © 2021 Apple Inc. All Rights Reserved.

Figure 28-1 Siri is Disabled/Enabled from the Device's Settings

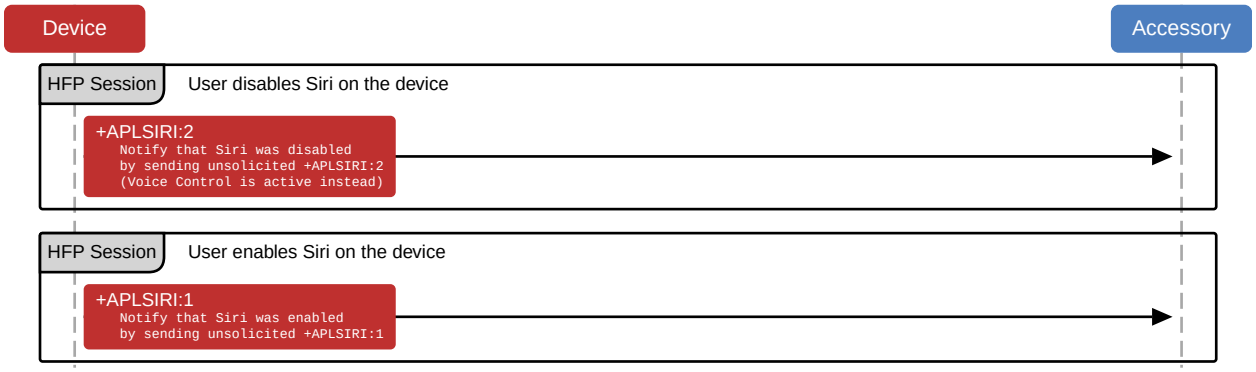

28.3 Initiating a Siri Session

Once support for Siri is established on both the accessory and the device, a Siri session can be started from either one.

28.3.1 Initiating a Session from the Accessory

The accessory should only initiate a Siri session as a result of a direct user action.

The accessory shall use the voice recognition command `AT+BVRA` defined in the Bluetooth *Hands-Free Profile* specification (*Hands-Free Profile* 1.6 profile specification, section 4.25) to initiate a Siri session.

The HFP profile shall be connected and SLC shall exist.

The accessory should use the following command sequence:

- The accessory sends an `AT+BVRA=1` command to the device.
- The device sends an `OK` response.
- The device launches a Siri session and creates a Synchronous Connection (SCO) for the audio.
- If the Siri session is not finished, the accessory shall send `AT+BVRA=1` to continue the conversation. This may need to happen multiple times.
- When the Siri session is finished, the device sends a `+BVRA:0` result code to the accessory.
- The device disconnects the SCO connection.

While a Siri session is active, the accessory shall let the user continue the conversation and ask follow up questions within the current context. In order to do so, the accessory shall be able to send an `AT+BVRA=1` command to the device even after Siri has been already activated and before `+BVRA:0`

Copyright © 2021 Apple Inc. All Rights Reserved.

is received. Figure 28-2 (page 111) shows an overview of the interaction when Siri is triggered from the accessory, the running session was continued twice and once Siri was finished, the device dismissed the session.

Figure 28-2 Initiating a Siri Session from the Accessory

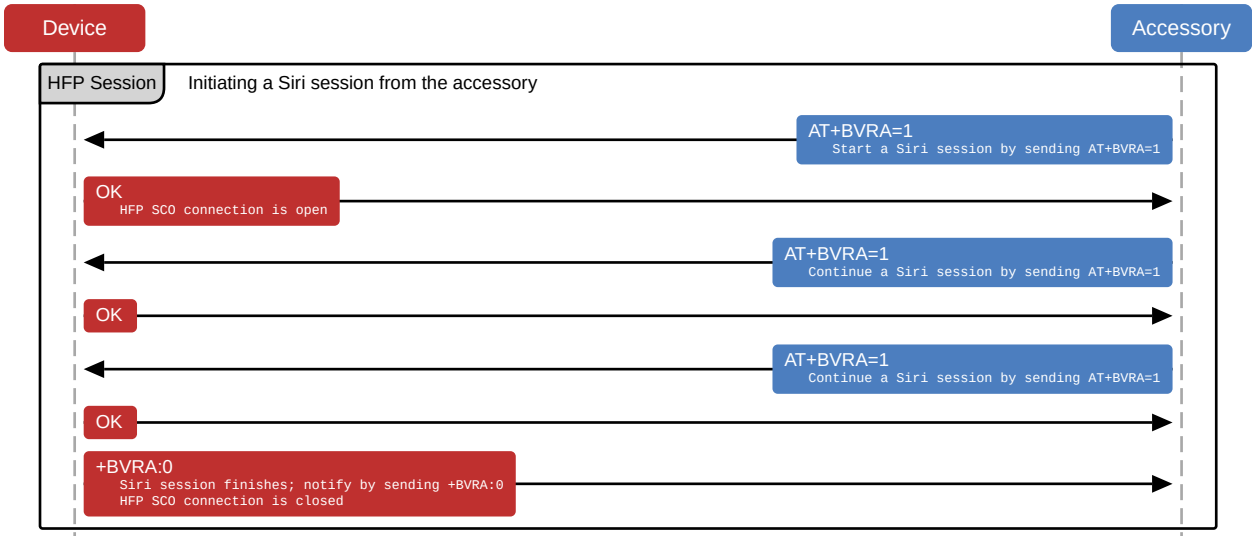

28.3.2 Initiating a Session from the Device

If the accessory supports voice recognition commands, the device sends a +BVRA event to indicate the start of a Siri session. The accessory shall enable support for voice recognition and indicate it in its feature response as described in the Bluetooth *Hands-Free Profile* 1.6 specification, section 4.34.1, "Bluetooth Defined AT Capabilities." Specifically, the HFP profile shall be connected, SLC shall exist, and voice recognition activation (bit 3) shall be enabled in the AT+BRSF command. The device will not use virtual call functionality for the Siri session if voice recognition activation is supported by the accessory.

The accessory should expect the following command sequence:

- The device sends a +BVRA:1 event to the accessory.
- The device launches a Siri session and creates a SCO connection for the audio.
- When the Siri session is finished, the device sends a +BVRA:0 result code to the accessory.
- The device disconnects the SCO connection.

2021-04-23 | Copyright © 2021 Apple Inc. All Rights Reserved.

Figure 28-3 Initiating a Siri Session from the Device

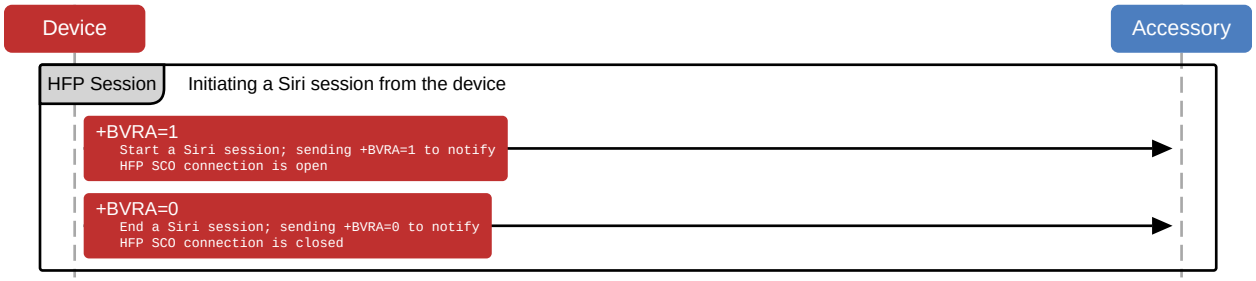

28.3.3 Ending a Session from the Accessory

Once a Siri session is running the accessory shall be capable of ending the session by sending an `AT+BVRA=0` command to the device. Figure 28-4 (page 112) shows an example of ending a running Siri session from the accessory. The accessory should only end an active session as a result of a direct user action.

Figure 28-4 Ending a Siri Session from the Accessory

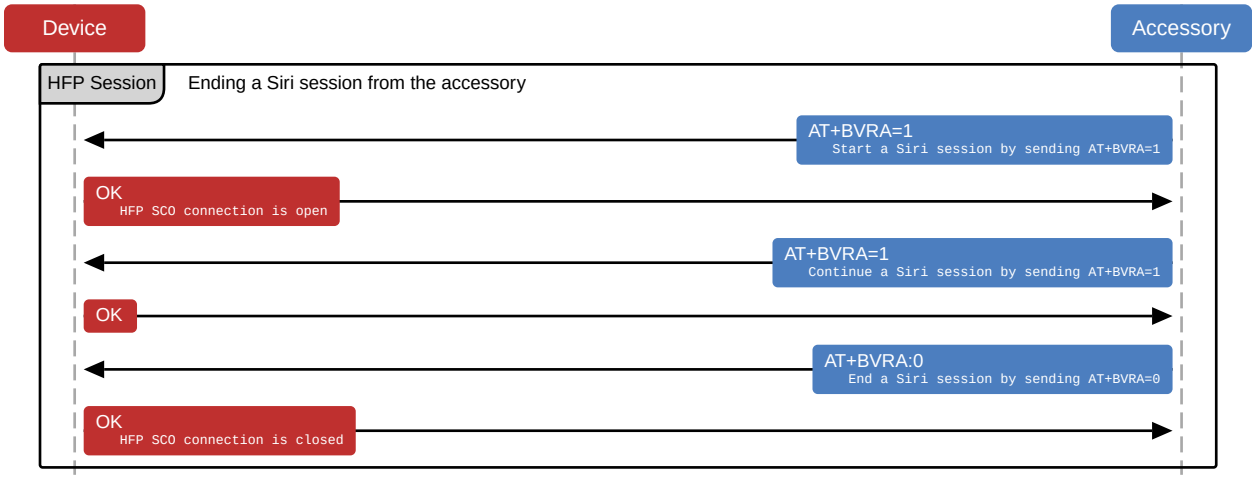

28.4 Siri Eyes Free Mode

Siri Eyes Free mode is a feature to control Siri responses that include display information and can be enabled or disabled as needed. In Siri Eyes Free mode, the user experience is tailored towards a driving scenario and interactions with Siri are done primarily via voice to minimize the need for the user to look

Copyright © 2021 Apple Inc. All Rights Reserved.

at a screen. Siri Eyes Free mode is supported only for Bluetooth-enabled vehicle entertainment systems and should not be used by any other accessories. Siri Eyes Free should not be triggered via a voice command.

The device will listen for the HFP AT command `AT+APLEFM` to enable or disable Siri Eyes Free mode.

This command is used by the device to modify Siri responses that contain visual information or require user interaction. Suitable audio feedback and voice commands will be available to the user based on the Siri use case that was initiated.

Siri Eyes Free mode is disabled by default. Once the accessory has enabled Siri Eyes Free mode, it remains enabled for all subsequent Siri sessions initiated from the accessory until the accessory disables it or the Bluetooth connection is disconnected.

28.4.1 HFP Command AT+APLEFM

Description: An accessory sends this command to notify a device of the preferred state of Siri Eyes Free mode.

Initiator: accessory

Format: `AT+APLEFM=`*value*

Response: `OK`

Defined Values:
- `0x00` = Disable Siri Eyes Free mode.
- `0x01` = Enable Siri Eyes Free mode.
- `0x02-0xFF` = reserved

Example: `AT+APLEFM=1`

28.5 Improving Voice Recognition

The microphone audio that the accessory sends to the device during a Siri session should be suitable for voice recognition. Audio requirements for optimal voice recognition may differ from requirements for optimal human perception (such as during a cellular phone call).

Filtering of the audio signal to remove echoes or feedback noise is acceptable.

To provide the best possible audio quality as Siri input, the accessory shall observe the following recommendations:

2021-04-23 | Copyright © 2021 Apple Inc. All Rights Reserved.

- **Echo cancellation and noise suppression (EC/NR)**: Directional microphones and linear beamforming with microphone arrays giving improved SNR are recommended. Linear echo cancellation for reducing unwanted audio sources (such as audio output from the system) without having any other effect on the speech signal are also recommended. However, single channel noise reduction methods (such as spectrum subtraction) shall not be applied, as they will be detrimental to the speech recognition accuracy. Similarly, automatic gain control, residual echo suppression and attempts to blank out non-speech periods in the waveform shall not be applied.
- **Signal gain**: When adjusting signal levels, the accessory shall avoid artifacts, dropouts, and clipping in all circumstances. Automatic Gain Control is not recommended. If the accessory adjusts signal gain, the gain should be held constant across each spoken utterance. The nominal level measured at the uplink output of the accessory should be A-weighted -30 dB ±2 dB root-mean-square (RMS), expressed in units relative to full-scale (dBFS(A)). Alternatively, the nominal level may be 13 dB ±2 dB SLR if using the ITU measurement procedure.
- **Signal-to-noise ratio (SNR)**: The average SNR should be greater than 20 dB. Below 20 dB, recognition rates will be impacted.
- **Reverberation**: An RT60 time less than 200 ms should be maintained.

28.5.1 Wide Band Speech Support

An accessory using Siri should support 16 kHz wide band speech audio for better audio quality and voice recognition performance. See the Bluetooth *Hands-Free Profile* 1.6 specification for details about wide band speech audio. Narrow band audio signal (8 kHz) is supported but not recommended.

28.6 Optimizing the Siri Experience

The start of a Siri session should not be accompanied by local beeps or verbal indications (such as an announcement of "...voice dialing...") from the accessory. When a Siri session becomes active, the device sends two beeps indicating that Siri is ready to receive instructions. Adding extra audible notifications only inserts delays in the system.

The accessory should wait for the device to end each Siri session.

The accessory should not send an `AT+BVRA=0` command unless it is prompted to do so by user interaction.

The accessory should be capable of rendering audio within 200 ms of SCO connection activation to ensure that the user always hears the Siri introductory beeps.

2021-04-23 | Copyright © 2021 Apple Inc. All Rights Reserved.

28.7 Common Siri Applications

Siri can send messages, find points of interests, place phone calls, and much more. As Siri capabilities are constantly growing, additional use cases may become available after the initial integration. In Siri Eyes Free mode, some of these use cases may not be accessible as the user experience is tailored towards a driving scenario.

28.7.1 Initialization Procedure After Connection is Established

Figure 28-5 (page 115) outlines the sequence the accessory has to trigger to be able to use Siri on a device. After establishing an HFP profile connection, the accessory shall first enable the custom Siri commands by sending `AT+XAPL` and provide the features it supports. After a confirmation is received from the device, the accessory should determine Siri's availability with `AT+APLSIRI?`.

Vehicles with Bluetooth-enabled infotainment systems can also enable Siri Eyes Free Mode during initialization. This is detailed in Figure 28-6 (page 116).

Figure 28-5 Siri Initialization Procedure

Figure 28-6 Siri Initialization Procedure with Siri Eyes Free

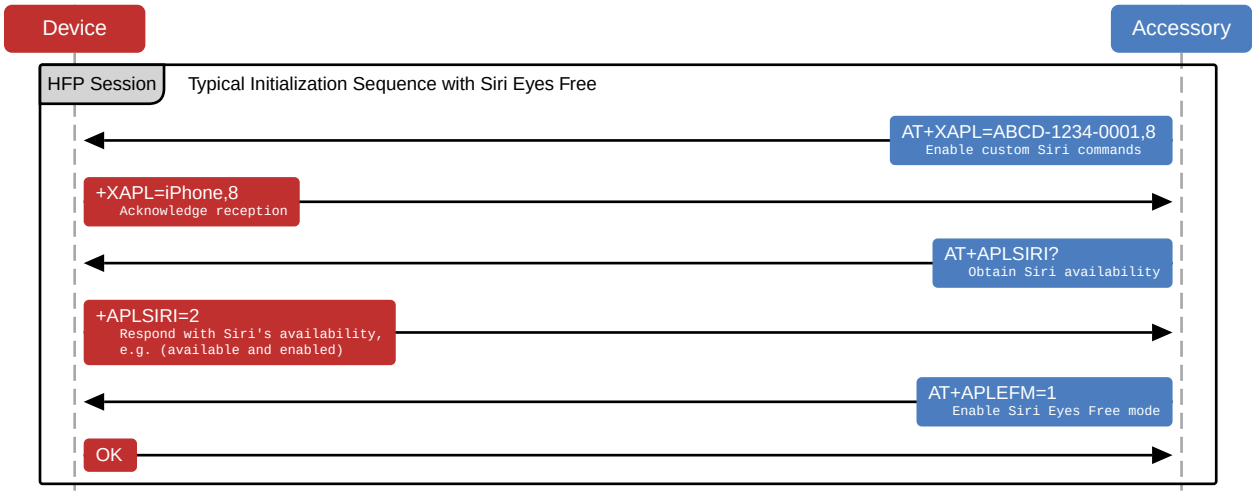

28.7.2 Phone Dialing Using Siri

Upon the user's request Siri can initiate an outgoing phone call. The device will initiate HFP call signaling to establish a phone call as described in Bluetooth (page 139). The accessory shall be able to transition to Hands-Free dialing at any time during or after a Siri session when signaled by the device.

28.7.3 Audio Routing and Media Playback Using Siri

Siri can control the media playback on a device, and if Siri determines that the user wants to play or pause music it will either start, pause or resume media playback. The device will send a notification to the accessory indicating a change in playback state and any associated track information. The accessory shall respond to those notifications, start or stop the music playback as requested, as well as update the correct playback state (e.g. shuffle, repeat).

The accessory shall not force a change in the playback state after a Siri session is ended. If music was playing before Siri was started, it shall continue playing, if it was paused, it shall remain paused.

After Siri starts music playback the accessory shall set its current audio route to match the audio source, depending on how audio is being received from the device (via Bluetooth or by a wired connection).

The available media playback notifications depend on the audio route being used:

- Bluetooth audio routes shall use the approach described in Notifications (page 147) and Audio Data Received via A2DP Profile (page 149).
- Wired audio routes shall use iAP2.

Copyright © 2021 Apple Inc. All Rights Reserved.

28.7.4 Turn-By-Turn Directions Using Siri

Siri can initiate active route guidance that will play turn-by-turn directions. In case the device is the active source and is already playing music, turn-by-turn directions will be mixed in as part of the audio stream. In case the device is not playing music, the accessory should be able to mix in turn-by-turn directions with the active audio source.

The device will notify the accessory to play turn-by-turn directions only over Bluetooth. Detailed information on how to distinguish between music playback and turn-by-turn notifications is available in Notifications (page 147).

28.8 User Interaction with Siri Eyes Free in a Vehicle

A vehicle that uses Siri Eyes Free mode shall integrate the Siri experience with the existing in-vehicle entertainment system and controls. The vehicle should provide a convenient interface to initiate, continue, and end a Siri session. Once a Siri session is running, the vehicle shall display a visual cue that voice recognition is in process. Figure 28-7 (page 118) outlines how a Siri interaction should be designed.

2021-04-23 | Copyright © 2021 Apple Inc. All Rights Reserved.

Figure 28-7 Siri Eyes Free User Interaction

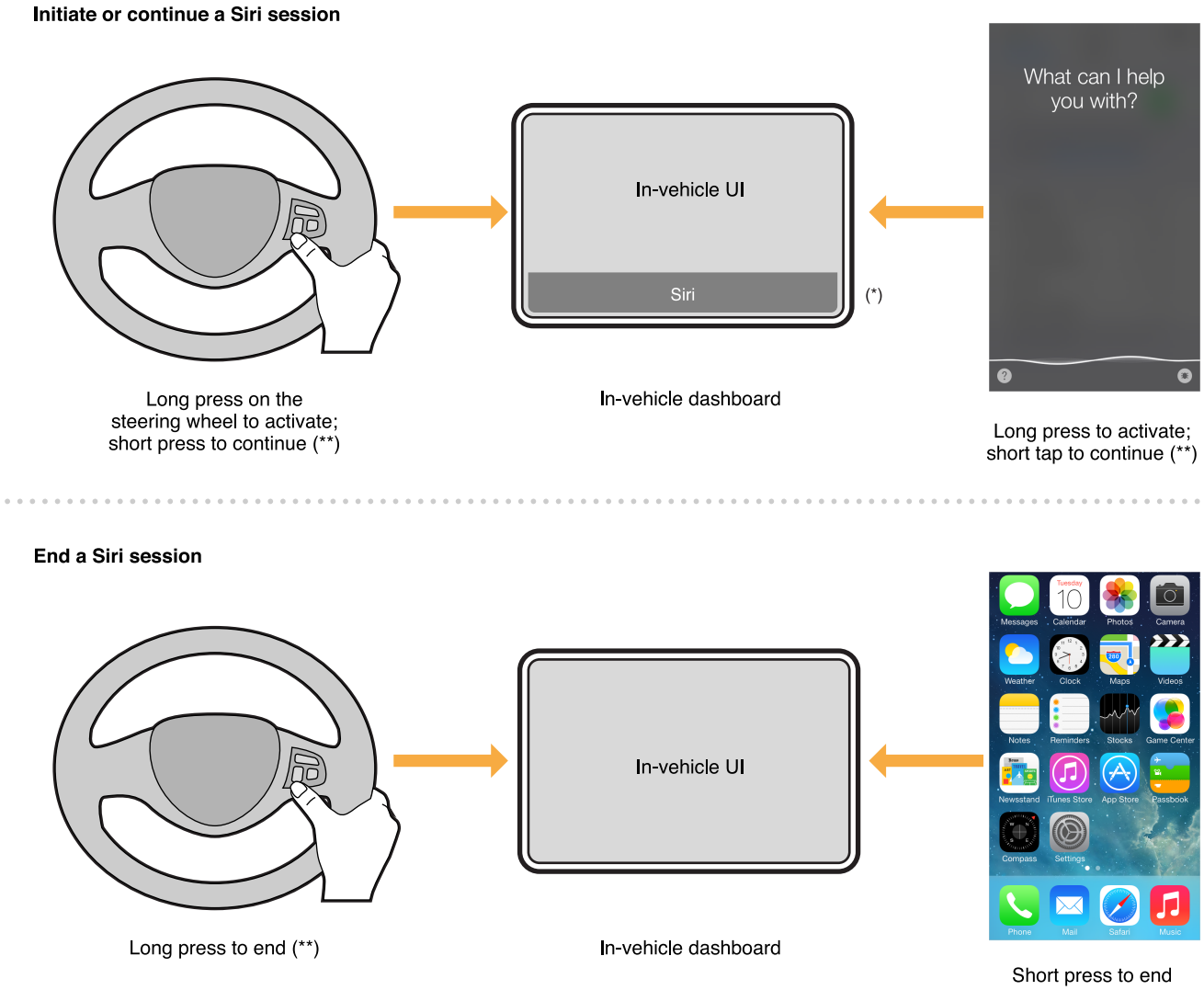

(*) If the accessory wishes to indicate that Siri is active, it shall do one of the following:

- Display the word 'Siri' (as capitalized) with no additional text or icon.
- Use generic text or icon that does not resemble the Siri microphone icon.

(**) If the vehicle is equipped with steering wheel controls, the steering wheel shall have a dedicated button or a long-press action on a button to start, continue and end a Siri session. The button long-press shall be 600 ms or less. If no steering wheel controls are available, a soft button shall be available within the in-vehicle user interface to start, continue or end a Siri session.

2021-04-23 | Copyright © 2021 Apple Inc. All Rights Reserved.

When a vehicle enables Siri Eyes Free mode, the device will not display any onscreen Siri content. If the device was locked at the time the Siri session was activated from the vehicle, it will remain locked and the screen will not turn on. If the user unlocks or manually activates the device while in an Eyes Free Session there will be a notification that the device is in an active Siri session but there will be no visual Siri content displayed.

28.9 Enabling/Disabling Siri from the Device

The user has the ability to disable or enable Siri from the Settings menu on the device. When Siri is disabled, Voice Control becomes the recognition engine on the device and will be triggered by default. The accessory may choose to either launch Voice Control with no further changes, in the same way Siri is launched as in Figure 28-8 (page 119) or display a warning message and not send an activation command to the device as in Figure 28-9 (page 120).

Figure 28-8 Siri is Deactivated - Launching Voice Control

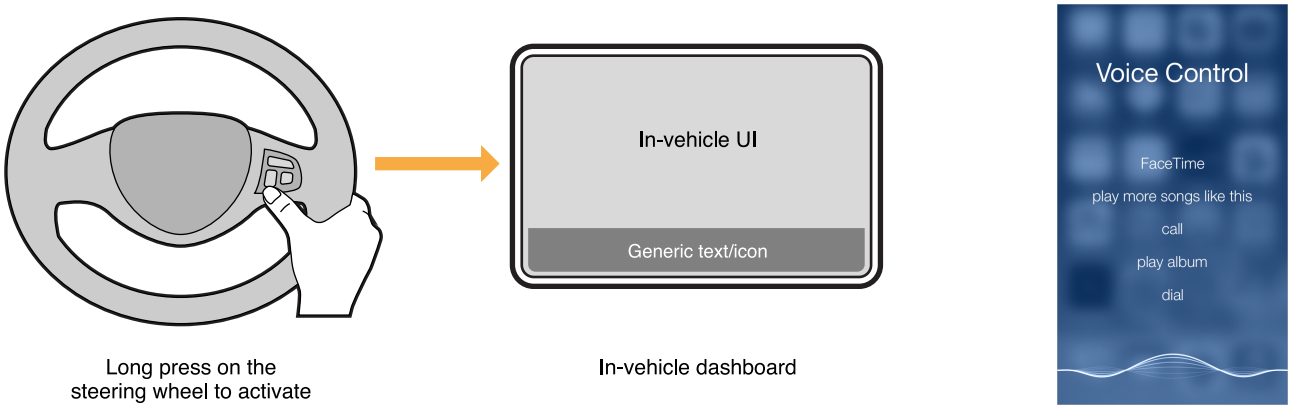

Figure 28-9 Siri is Deactivated - Displaying a Warning Message

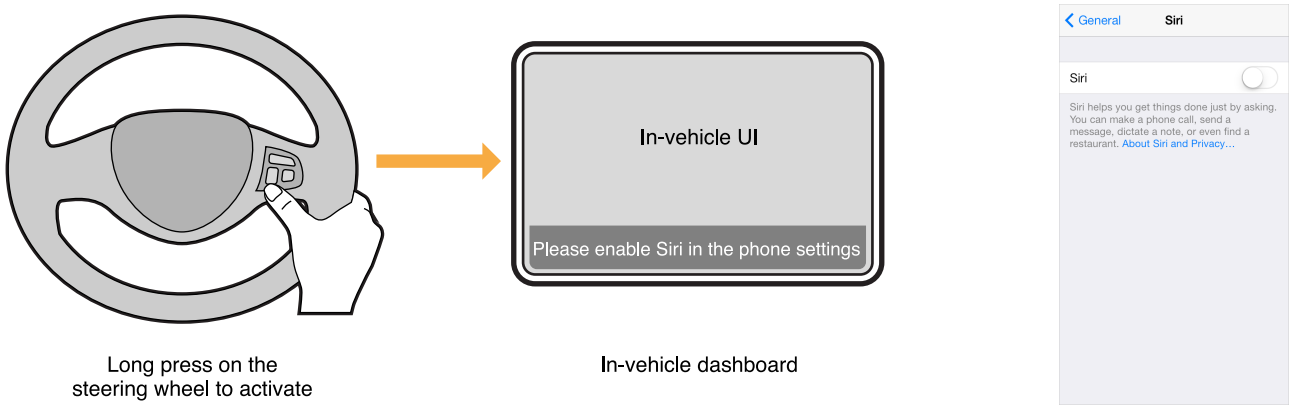

28.10 Test Procedures

28.10.1 Siri Eyes Free

The following test procedures are applicable to accessories that interact with Siri Eyes Free.

The speaker should be a native speaker of North American English. If the tester's native language is not North American English, set Siri to the speaker's native language and translate the provided phrases to that language.

28.10.1.1 General

1. Pair and establish a Bluetooth Handsfree Profile (HFP) connection between the iPhone and the head unit. Activate Siri from the vehicle steering wheel button (e.g. by press hold):
   a. Observe that the iPhone screen remains inactive after a Siri session has started (a visual indicator will be visible on the device if the screen is activated manually).
   b. Ensure that Siri opening chime is heard completely through the vehicle speakers.
   c. Observe a visual notification in the in-car User Interface (UI) that a Siri session is active (textual notification, on-screen UI, etc.).
2. Activate Siri from the vehicle steering wheel button and say "Send a message to Peter. How are you?". While still saying the message, press the vehicle steering wheel button to cancel Siri (e.g. by press):
   a. Ensure the iPhone screen remains inactive (if manually activated, the visual indicator on the phone will disappear).
   b. Verify that the in-car UI for Siri interaction dismisses and the head unit resumes the state before Siri's interaction.

Copyright © 2021 Apple Inc. All Rights Reserved.

3. Activate Siri from the vehicle steering wheel button and say "How is the weather in San Francisco?". Wait for Siri to respond with the weather forecast. Once the weather forecast is complete, resume Siri from the vehicle steering wheel button and say "What about New York?":
   a. Observe that the visual indicator is still active on the phone.
   b. Listen for the Siri opening chime.
   c. The vehicle UI should be displaying an on-going Siri session.
   d. Verify that Siri responds with the weather forecast for New York.
4. In case the vehicle UI offers on-screen controls to activate/cancel/resume Siri, repeat steps (1) to (3) for all on-screen controls.
5. Activate Siri from the steering wheel button and say "What's the time". Listen to the current time and do not interact with Siri or the iPhone. After 5 seconds have expired:
   a. Observe that the visual indicator on the phone is no longer visible.
   b. The in-car UI for Siri interaction should be dismissed.
   c. The head unit should resume the state before Siri's interaction.
6. Listen to FM radio from the car speakers (no A2DP streaming active). Press and hold phone's Home button to activate Siri from the phone:
   a. Observe a visual notification in the in-car UI that a Siri session is active (textual notification, on-screen UI, etc.).
   b. Observe Siri's interaction on the phone's screen and ask "What's the time?"
   c. After Siri has responded, lock the phone again to dismiss the Siri session by pressing the phone's sleep/wake or side button.
7. On the phone go to Settings and turn off Siri. Activate Siri from the head unit. Observe one of the following depending on the actual implementation (a) Voice Control starts instead of Siri (b) The head unit displays a warning that Siri Eyes Free is not available.
8. On the phone go to Settings and turn Siri back on. Verify that Siri can be activated/cancelled from the head unit and from the Home button on the phone.
9. Turn Bluetooth off from the Settings on the phone. Verify that Siri cannot be started.
10. Turn Bluetooth back on from the Settings on the phone. Verify that Bluetooth HFP profile reconnects and that Siri can be activated/cancelled from the head unit and from the Home button on the phone.
11. Make sure there is no accessory battery status level indicator icon displayed on the phone's status bar.

28.10.1.2 Siri Dialog

1. Activate Siri from the vehicle's steering wheel button and say "Send a text message to *insert contact name*". When Siri prompts for "what would you like it to say", dictate a short message. After Siri has read back your dictated message, say "Review it". After Siri has read back the message again, say "Review it" again. Repeat this cycle ~5 times to ensure that the head unit is able to handle a long interaction with Siri. At the end say "Send it" and verify that the message is sent. Verify that

Copyright © 2021 Apple Inc. All Rights Reserved.

the opening chime is audible and the message is sent. After the Siri session is closed, the audio playback should go back to the state it was before Siri was started, i.e. if it was paused remains paused, if it was playing remains playing.

2. Start Siri from the vehicle's steering wheel button and ask for directions. Follow up through the dialog until the navigation is started. Verify that the Siri session is closed and that the audio playback goes back to the state it was before Siri was started, e.g. if it was paused remains paused, if it was playing remains playing.
3. Start Siri from the vehicle's steering wheel button and say "Search the web for polar bears". Verify that Eyes Free mode is on and that this use case is blocked by Siri. Note: In some implementations the vehicle has to be in motion before Eyes Free is activated by the car kit.
4. Start Siri from the vehicle's steering wheel button and say "What is the current time in Munich?". After Siri has answered but before ~5 seconds have elapsed, resume Siri (e.g. by a short press on the steering wheel button) and verify that Siri is initiated again. Say "What about San Francisco?". Repeat (with a different city) and verify that this can continue indefinitely as long as you short press on the steering wheel button within 5 seconds of the last response.

28.10.1.3 Bluetooth HFP A2DP Music

1. Establish a Bluetooth A2DP connection and switch to Bluetooth audio source on the head unit. Activate Siri and ask "Next track". Verify that track advances and that audio is playing through vehicle speakers. Verify that the Siri in-car UI is dismissed and the head unit goes back to its initial state.
2. Activate Siri and say "Pause the music". Verify that audio remains paused after Siri has been dismissed. Verify that the Siri in-car UI is dismissed and the head unit goes back to its initial state.
3. Pause music playback on the head unit (via AVRCP command). Activate Siri and ask "What time is it?". Verify that the music playback remains paused after the Siri session has been dismissed. Verify that the Siri in-car UI is dismissed and the head unit goes back to its initial state.
4. Switch to FM radio on the head unit. Activate Siri and ask "Play me a song". Verify that head unit is able to automatically switch to Bluetooth audio and iPhone music starts playing. Verify that the beginning of the selected track is heard, e.g. there is no skipping of audio packets. Verify that the Siri in-car UI is dismissed and the head unit goes back to its initial state.
5. Activate Siri and ask "Shuffle all songs". Verify that head unit correctly updates NowPlaying track information. Verify that the Siri in-car UI is dismissed and the head unit goes back to its initial state.
6. Activate Siri and ask to play a specific artist or title. Verify that the Siri session is dismissed after the music starts. Make sure the correct metadata is displayed on the screen. Verify that the Siri in-car UI is dismissed and the head unit goes back to its initial state.

2021-04-23 | Copyright © 2021 Apple Inc. All Rights Reserved.

28.10.1.4 Call

1. Activate Siri and call a contact with more than one phone number (home and mobile). Wait for Siri's response to ask for which phone number to call. Answer with "home". Verify that call transition is handled correctly by the head unit and any Siri UI displayed on the vehicle screen is dismissed.
2. While iPhone music is playing, activate Siri and say "Call *insert contact name to call*". Verify that call transition is handled correctly by the head unit. Verify that iPhone music playback resumes after the call has been answered and terminated on the far end. Verify that the Siri in-car UI is dismissed and the head unit goes back to its initial state.
3. While iPhone music is playing, start Siri and say "Call *insert contact name to call*". Verify that call transition is handled correctly by the head unit. Verify that iPhone music playback resumes after the call has been answered and terminated on the near end (i.e. on the head unit). Verify that the Siri in-car UI is dismissed and the head unit goes back to its initial state.
4. While in a Siri session, receive an incoming call on the head unit. Verify that head unit handles call-signaling correctly and transitions to phone UI once the call has been accepted. Verify that the Siri in-car UI is dismissed and the head unit goes back to its initial state.

28.10.1.5 Bluetooth + Wired iAP2

1. Connect device to head unit via a Lightning connector (iPhone 5). Switch to iPod music and verify that audio is playing. Activate Siri and say "Next track". Verify that track advances and head unit displays track metadata correctly. Verify that the Siri in-car UI is dismissed and the head unit goes back to its initial state.
2. From the head unit UI, select a playlist with a single song and start playing it. Start Siri from the vehicle steering wheel and say "Play ..... *make sure to select a song to play that is (a) not in the same album as the single-track playlist and (b) not song track index 0 of its album*". Verify that the new song starts playing and that the head unit displays the track metadata for this new song correctly. Verify that the Siri in-car UI is dismissed and the head unit goes back to its initial state.
3. Turn Shuffle off on the head unit UI. Then start Siri and say "Shuffle all songs". Verify that the shuffle indicator on the head unit UI is updated and the correct track metadata for the new now playing song is displayed correctly Verify that the Siri in-car UI is dismissed and the head unit goes back to its initial state.
4. Switch to FM radio on the head unit. Activate Siri and say "Play me a song". Verify that head unit is able to automatically switch to iPOD audio source and that audio starts playing through the speakers. Verify that there is no skipping of audio at the beginning of the selected track. Verify that the Siri in-car UI is dismissed and the head unit goes back to its initial state.
5. Pause music playback on the head unit (via iAP2 commands). Activate Siri and ask "What time is it?". Verify that music playback remains paused after Siri session has been dismissed. Verify that the Siri in-car UI is dismissed and the head unit goes back to its initial state.

2021-04-23 | Copyright © 2021 Apple Inc. All Rights Reserved.

6. While iPhone music is playing, start Siri and say "Call *insert contact name to call*". Verify that call transition is handled correctly by the head unit. Verify that iPhone music playback resumes after the call has been answered and terminated on the far end. Verify that the Siri in-car UI is dismissed and the head unit goes back to its initial state.
7. While iPhone music is playing, start Siri and say "Call *insert contact name to call*". Verify that call transition is handled correctly by the head unit. Verify that iPhone music playback resumes after the call has been answered and terminated on the near end (i.e. on the head unit). Verify that the Siri in-car UI is dismissed and the head unit goes back to its initial state.
8. Pause music playback on the head unit (via iAP2 commands). Start Siri and say "Call *insert contact name to call*". Verify that call transition is handled correctly by the head unit. Verify that iPhone music playback remains paused after the call has been answered and terminated on the far end. Verify that the Siri in-car UI is dismissed and the head unit goes back to its initial state.

2021-04-23 | Copyright © 2021 Apple Inc. All Rights Reserved.

29. Wi-Fi Information Sharing

Wi-Fi configuration information can be exchanged between devices and accessories.

Devices can share Wi-Fi configuration information with an accessory. The accessory can initiate this process, but the user shall grant permission for the device to share this information. The device can only share information about the currently connected Wi-Fi network, and this feature will not account for other router-configured access control mechanisms, such as RADIUS or MAC address filtering.

Figure 29-1 Wi-Fi Information Sharing Alert

See the Accessory Interface Specification (page 16) for more information.

Protocols

30. USB Power Capability Vendor Request

If the accessory is a USB host, and it does not implement iAP2 (page 137), then it may send an Apple-specific USB vendor request to communicate how much power is available to the device. In this case, the accessory shall enumerate and identify the presence of a device, then send the vendor request. The vendor request shall be sent every time the device is enumerated by the accessory.

Table 30-1 USB Vendor Request for non-iAP2 accessory USB Embedded Host

Field	Value	Comments
`bmRequestType`	`0x40`	Device-to-host request, vendor-defined type, device is recipient.
`bRequest`	`0x40`	Vendor-defined USB get enabled capabilities request.
`wValue`	See comments.	Charging current available, expressed as an offset from 500 mA. Shall be 500 (1000 mA charging current available), 1000 (1500 mA charging current available), 1600 (2100 mA charging current available), 1900 (2400 mA charging current available), or 2500 (3000 mA charging current available).
`wIndex`	See comments.	Shall be the same as wValue.
`wLength`	`0`	0 bytes expected.

2021-04-23 | Copyright © 2021 Apple Inc. All Rights Reserved.

31. USB D+/D- Resistor Networks

Accessories that do not implement any of the following may use USB resistor networks to identify their current capability:

- iAP2 (page 137).
- USB Power Capability Vendor Request (page 127).
- USB-C Current (page 132).
- USB Power Delivery (page 131).

Note:
All accessory power source testing shall be performed with programmable loads, not devices. Device power draw varies with environmental factors.

31.1 Declaring Power Source Capability

The accessory shall connect the USB D+ and USB D- pins to resistor networks as shown in Figure 31-1 (page 128).

Figure 31-1 USB D+/D- resistor networks

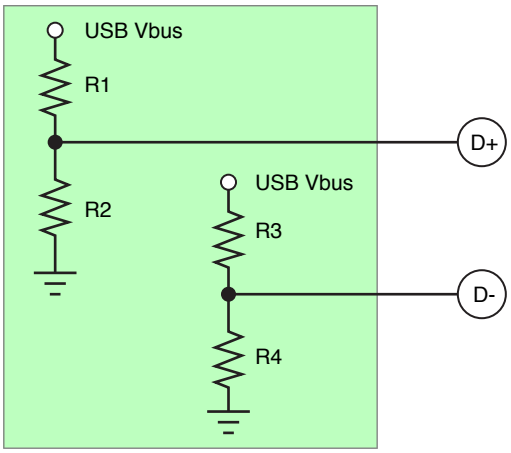

2021-04-23 | Copyright © 2021 Apple Inc. All Rights Reserved.

Note:
Every iOS device-compatible connector on an accessory that uses a USB resistor network shall have its own set of resistors. The accessory shall be capable of supplying the total current required when all connectors are in use, regardless of whether the connectors are compatible with devices or not.

The resistor network shall be connected at all times unless the accessory uses one of the following methods to enable charging or detect the presence of a device. In these cases, it shall immediately present the resistor network.

- The accessory uses a direct user action to enable charging.
- The accessory senses the attachment of the device via electromechanical means such as a contact switch.

The accessory shall not monitor the USB D+ and USB D- pins to detect the presence of a device.

Note:
All resistors used to implement the networks specified in Figure 31-1 (page 128) shall have a tolerance of 1% or better. The resistor network shall not be emulated by driving the voltage of the USB D+/D- pins using some other means.

Table 31-1 USB D+/D- resistor values

Max Current	R1	R2	R3	R4
3000 mA	43.2 kΩ	49.9 kΩ	24.9 kΩ	49.9 kΩ
2400 mA	43.2 kΩ	49.9 kΩ	43.2 kΩ	49.9 kΩ
2100 mA	43.2 kΩ	49.9 kΩ	75.0 kΩ	49.9 kΩ
1000 mA	75.0 kΩ	49.9 kΩ	43.2 kΩ	49.9 kΩ

31.2 Identifying Power Source Current Limit

Accessories shall take into account the variation of USB VBUS voltage and resistor tolerances.

The resistor network values and corresponding current source limit should be identified using the following procedure:

1. Read the VBUS voltage using an ADC. If value is less than 4.5 V, return no resistors detected.
2. Pull-down the D+ and D- lines and read the voltage using an ADC. If either voltage value is less than 1 V, return no resistors detected.
3. Disable the D+ and D- pull-downs and allow the voltage to return to normal.

2021-04-23 | Copyright © 2021 Apple Inc. All Rights Reserved.

4. Read the D+ and D- voltages using an ADC (to determine the value for R1 and R3 respectively):
   - If the voltage is >2.995 V (based on 1 MΩ load impedance), then assume a resistor value of 24.9 kΩ.
   - If the voltage is between 2.320 V and 2.995 V (based on 1 MΩ load impedance), then assume a resistor value of 43.2 kΩ.
   - If the voltage is < 2.320 V (based on 1 MΩ load impedance), then assume a resistor value of 75.0 kΩ.
5. Determine the max current based on Table 31-2 (page 130).
6. If resistor values could not be identified, proceed to identify the power available based on the *USB Battery Charging 1.2* specification.

Table 31-2 USB D+/D- resistor values

Max Current	R1	R2	R3	R4
1000 mA	24.9 kΩ	49.9 kΩ	24.9 kΩ	49.9 kΩ
1000 mA	24.9 kΩ	49.9 kΩ	43.2 kΩ	49.9 kΩ
1000 mA	24.9 kΩ	49.9 kΩ	75.0 kΩ	49.9 kΩ
3000 mA	43.2 kΩ	49.9 kΩ	24.9 kΩ	49.9 kΩ
2400 mA	43.2 kΩ	49.9 kΩ	43.2 kΩ	49.9 kΩ
2100 mA	43.2 kΩ	49.9 kΩ	75.0 kΩ	49.9 kΩ
1000 mA	75.0 kΩ	49.9 kΩ	24.9 kΩ	49.9 kΩ
1000 mA	75.0 kΩ	49.9 kΩ	43.2 kΩ	49.9 kΩ
500 mA	75.0 kΩ	49.9 kΩ	75.0 kΩ	49.9 kΩ

2021-04-23 | Copyright © 2021 Apple Inc. All Rights Reserved.

32. USB Power Delivery

Accessories either providing USB Power Delivery (USB-PD) or drawing power from USB-PD sources shall comply with the *USB Power Delivery Specification, Revision 3.0*, version 1.2.

Accessories implementing USB-PD shall incorporate a PD controller that is USB-IF certified with a *Silicon* Test ID from the USB-IF.

Accessories drawing power from USB-PD sources shall correctly identify all sources as defined in the *USB Power Delivery Specification, Revision 3.0*, version 1.2.

Apple recommends the GRL-USB-PD-C2 (see https://graniteriverlabs.com/usb-pd-c2/) for USB-PD testing and compliance verification.

2021-04-23 | Copyright © 2021 Apple Inc. All Rights Reserved.

33. USB-C Current

Accessories either providing direct power via USB-C Current or drawing power from USB-C Current sources shall comply with the *USB Type-C Cable and Connector Specification Release 1.3*, section 4.6.2.

Apple recommends the GRL-USB-PD-C2 (see https://graniteriverlabs.com/usb-pd-c2/) for USB-C Current testing and compliance verification.

Copyright © 2021 Apple Inc. All Rights Reserved.

34. Advanced Audio Distribution Profile (A2DP)

Accessories may implement the Advanced Audio Distribution Profile (A2DP) over Bluetooth (page 139) to receive audio from iOS devices and Mac computers.

The audio content from the device can be broadly classified into two categories:

- Audio content from music, video, or gaming applications.
- System-generated sounds for alerts and notifications.

A2DP is often implemented in speakers and headsets.

Accessories that implement A2DP shall satisfy all requirements stated in Bluetooth (page 139).

34.1 Bluetooth A2DP Specification

Every accessory that implements the Advanced Audio Distribution Profile shall meet the requirements of the Bluetooth *Advanced Audio Distribution Profile* specification, Version 1.2.

34.1.1 AVDTP Transactions

Accessories shall respond to Audio/Video Distribution Transport Protocol (AVDTP) signaling transactions before the device's 5 second RTX_SIG_TIMER expires or the device will terminate the signaling channel. See Section 6.2 "Transaction Model" and section 6.4 "Signal Command Set" of the Bluetooth *Audio/Video Distribution Transport Protocol*, Version 1.3.

34.2 SubBand Codec (SBC)

The SBC Codec Specific Information Elements, defined in Section 4.3.2 of the A2DP specification, that are applicable to iOS devices and Mac computers are listed in Table 34-1 (page 133).

Table 34-1 SubBand Codec Information Elements for iOS devices and Mac computers

Element	Value
Sampling Frequency	44,100 Hz
Channel Mode	Stereo

2021-04-23 | Copyright © 2021 Apple Inc. All Rights Reserved.

Element	Value
Block Length	16
Subbands	8
Allocation Method	Loudness
Bitpool range	2 to 53. Accessories for iOS devices and Mac computers should support 53.

34.3 MPEG 2/4 AAC Codecs

Devices support the non-mandatory codec MPEG-2/4 AAC, as defined in Section 4.5 of the *Advanced Audio Distribution Profile* specification, Version 1.2. Accessories should use the AAC codec in addition to SBC, because it provides higher audio quality for a given bit rate.

> **Note:**
> The following specifications provide details of Apple's implementation of the MPEG-2/4 AAC codec. In case of conflicts, the A2DP specification governs.

The MPEG 2/4 AAC Codec Specific Information Elements, defined in Section 4.5 of the A2DP specification, that are applicable to devices are listed in Table 34-2 (page 134).

Table 34-2 MPEG-2/4 AAC Codec Information Elements for devices

Element	Value
Object Type	MPEG-2 AAC LC
Sampling Frequency	44,100 Hz
Channels	2
Bit rate	264,630 bps
VBR	0

AAC audio stream packets in devices have the structure shown in Table 34-3 (page 134).

Table 34-3 AAC audio packet for devices

L2CAP	AVDTP	MPEG-4 LATM	MPEG-4 AAC
Header	Header	AudioMuxElement	Audio Payload

Copyright © 2021 Apple Inc. All Rights Reserved.

The AAC Media Payload Format, as defined in Section 4.5.4 of the A2DP specification, is formatted using LATM, as defined in Section 4 of *IETF RFC 3016*. The following notes apply to the packet fields shown in Table 34-3 (page 134).

- The recommended L2CAP MTU value for each device's AAC streaming channel is 885 bytes.
- The AVDTP Header is shown as the RTP header in Figure 4 of RFC 3016, and is the header defined in Section 7.2.1 of the Bluetooth *Audio/Video Distribution Transport Protocol*, Version 1.2.
- The `AudioMuxElement` is the same as the RTP payload in RFC 3016. It is defined in Section 1.7.3, Table 1.41 in ISO/IEC 14496-3:2009, subpart 1. The `muxConfigPresent` argument to the `AudioMuxElement` is set to 1 (in-band mode), as recommended in Section 4.1 of RFC 3016. As recommended in Section 4.3 of RFC 3016, only one `AudioMuxElement` is put into each AVDTP packet.
- The audio payload is encoded using MPEG-4, as recommended in Section 4.5.4 of the A2DP specification.
- The accessory should support AAC-LC VBR and handle bit rate changes without audio gaps. Devices will vary AAC bit rate depending on the content.

34.4 Test Procedures

34.4.1 Audio Quality

Verify that there are no audio quality issues in each of the following scenarios:

1. Stream music from the Music app.
2. Stream music from a radio station within the Music app.
3. Stream audio using the Podcast app.

34.4.2 Audio Switching

1. During A2DP streaming, switch audio back to device and switch back to accessory.
2. Audio should be routed to the intended source. Audio quality should be good switching back to Bluetooth.

34.4.3 HFP Interaction

1. Make incoming / outgoing call during A2DP.
2. Audio should be suspended during the call and resume after the call.

2021-04-23 | Copyright © 2021 Apple Inc. All Rights Reserved.

34.4.4 Siri

1. Trigger Siri during A2DP.
2. Audio should be resumed after the Siri session.

34.4.5 Video Playback

1. Stream A2DP while watching a video.
2. Audio / video synchronization and quality should be good.

2021-04-23 | Copyright © 2021 Apple Inc. All Rights Reserved.

35. iAP2

Accessories may use the iAP2 protocol to access advanced device features. One such feature is the ability to communicate securely with third-party iOS applications via the iOS External Accessory Framework (http://developer.apple.com/library/ios/#featuredarticles/ExternalAccessoryPT/Introduction/Introduction.html).

See the Accessory Interface Specification (page 16) for more information.

2021-04-23 | Copyright © 2021 Apple Inc. All Rights Reserved.

Transports

36. Bluetooth

Accessories that integrate Bluetooth technology shall comply with the requirements stated in this chapter.

Every accessory that is compatible with a device shall support the *Bluetooth Core Specification* Version 2.1 + EDR or higher. This specification introduced the important security feature Secure Simple Pairing as well as Extended Inquiry Response.

36.1 Enhanced Data Rate

The Enhanced Data Rate (EDR) feature introduced in the *Bluetooth 2.0* specification enables accessories to communicate more efficiently. Every accessory shall use EDR for the following reasons:

- It provides higher data rates compared to Basic Data Rate (BDR).
- It communicates more efficiently, transferring more data bits per unit of time.
- It reduces the power consumption used per bit transferred.
- It improves coexistence with Wi-Fi and other connected Bluetooth accessories because it frees up more air time.
- It improves performance in multipoint configurations.

36.2 Adaptive Frequency Hopping

The Adaptive Frequency Hopping (AFH) feature introduced in the *Bluetooth 1.2* specification improves coexistence with Wi-Fi and other connected Bluetooth accessories. Every accessory shall use AFH.

36.3 Sniff Mode for Low Power Consumption

Minimizing power consumption is critical for all mobile devices. Therefore, every accessory that is compatible with a device:

- Shall support and should request Bluetooth sniff mode.
- Shall accept requests for sniff mode and support all valid parameters listed in the Bluetooth specification.
- Shall support a sniff interval of 15 ms.

2021-04-23 | Copyright © 2021 Apple Inc. All Rights Reserved.

- Should use the following recommended sniff mode values:
  - Max Interval: 15 ms
  - Min Interval: 15 ms
  - Sniff Attempt: 1
  - Sniff Timeout: 0
- Shall not renegotiate sniff after being established.
- Shall support sniff subrating.

Accessories that are compatible with iOS devices and Mac computers should also use sniff mode as much as possible, especially when there is little or no data being transmitted over the Bluetooth link. Besides its power consumption advantages, sniff mode enables better antenna sharing with Wi-Fi.

The sniff mode parameters are specific to the usage model and Bluetooth profile. The device expects the accessory to request sniff mode with appropriate parameters for a specific usage. If the accessory does not send such a request, the device may send a sniff mode request. When the device sends a request for sniff mode, the accessory shall accept the request and its parameters without negotiation.

If the accessory sets the sniff mode parameters, the accessory shall set the sniff interval to less than a third of the Bluetooth baseband Link Supervision Timeout (page 142). This makes the Bluetooth link less susceptible to interference. To improve link robustness, the accessory should use a shorter sniff interval instead of multiple sniff attempts.

Links with a sniff interval of 1 second or more require a large correlation window, which has to be taken into account when calculating the number of sniff attempts. With sniff intervals shorter than 1 second, multiple sniff attempts can improve link robustness but will increase power consumption.

36.4 Role and Topology Management

Every accessory that is compatible with a device shall:

- Accept a request for Role Switch from a device.
- Continue with the connection when the device rejects a request for Role Switch.

In a Bluetooth connection, there are two entities:

- The Central establishes the common clock and frequency hopping synchronization reference.
- The Peripheral synchronizes with the Central.

The Central can be synchronized with multiple Peripherals, thus forming a piconet. The Central can also be a Peripheral to another Central, creating a scatternet.

A scatternet creates complications since the device has to alternate between the two piconets and thus wastes valuable bandwidth. Managing the topology of the network is therefore important for maximum performance. The device may request a Role Switch, depending on its current topology, and

2021-04-23 | Copyright © 2021 Apple Inc. All Rights Reserved.

the accessory shall accept the request. The device may also reject a request for a Role Switch because of topology concerns. Having a suboptimal topology may degrade the audio quality and the user's experience.

The accessory should avoid requesting to be the Central as the device will need to be the Central in more frequently occurring scenarios. Accessories that always insist on being the Central may impact the overall user experience.

Accessories that connect to multiple iOS devices or Mac computers simultaneously shall support creating a scatternet.

36.5 Extended Inquiry Response

Every accessory that is compatible with a device shall provide the following information in its Extended Inquiry Response packet:

- The Local Name of the accessory (Complete or Shortened).
- The TX Power Level.

During the Bluetooth discovery process, the device prefers to display the Friendly Name of discovered accessories. Before the 2.1 version of the Bluetooth specification the device would have to set up a connection to the accessory and do a Remote Name Request, which takes power, antenna time, and user's time. The Extended Inquiry Response feature, introduced in Bluetooth 2.1, lets an accessory send its Local Name and other information as part of the Inquiry Response and thereby increase the speed and efficiency of the discovery process.

The Local Name should match the accessory's markings and packaging and not contain ':' or ';'. The accessory may append up to 6 differentiating characters to the Local Name, such as the last few digits of the serial number or MAC address, if a user is likely to encounter more than one of the accessories at the same time.

If the accessory allows the user to customize the Local Name parameter, the accessory should provide a means to restore the factory default name.

36.6 Secure Simple Pairing

Every accessory that is compatible with a device shall:

- Use Secure Simple Pairing.
- Use the Numerical Comparison method if it has a display and input device supporting it.

2021-04-23 | Copyright © 2021 Apple Inc. All Rights Reserved.

Secure Simple Pairing greatly increases security and is a mandatory security feature introduced in the Bluetooth 2.1 specification. To protect against a man-in-the-middle attack, the Numerical Comparison association model should be used whenever feasible. See Volume 1, Section 5.4 in the *Bluetooth Core Specification*, Version 2.1 + EDR.

36.7 Pairing Button

If the accessory has a dedicated pairing control surface and it is labeled, it should use official Bluetooth branding. See https://www.bluetooth.com/marketing-branding/brand-best-practices-guidelines.

36.8 Class of Device (CoD)

iOS devices and Mac computers use the accessory's Class of Device for UI purposes or to configure specific features.

Every accessory that is compatible with a device shall accurately set its Class of Device using the Bluetooth SIG defined Major Device Class and Minor Device Class. See Volume 3, Part C, Section 3.2.4 in the *Bluetooth Core Specification*, Version 5.0.

For example, an audio/video accessory intended to operate in a vehicle should set Major Device Class to *audio/video* and Minor Device Class to *car-audio*.

36.9 Link Supervision Timeout

The link supervision timeout is used to detect link loss between the accessory and the device.

The accessory shall set the link supervision timeout to 2 seconds or greater when it is the Central to account for the unpredictable nature of RF signals as well as the device's need to service other concurrent wireless systems.

36.10 Delay Reporting

Devices (as of iOS 8.2) support the Delay Reporting commands as specified in the Bluetooth *Audio/Video Distribution Transport Protocol*, Version 1.3. Accessories should provide this information as it is used to improve audio/video synchronization for video playback. Accessories should not report a delay of more than 1000 ms and should not update the delay more than 1 time per second.

2021-04-23 | Copyright © 2021 Apple Inc. All Rights Reserved.

36.11 Profiles

The Apple knowledge base article https://support.apple.com/kb/ht3647 provides a complete list of the Bluetooth profiles that certain devices support. The Bluetooth specifications are the starting point for designing accessories that are compatible with these products. The following sections add information and requirements for some profiles, which can help accessory developers achieve superior results.

36.11.1 Device ID Profile (DID)

Every accessory that is compatible with a device shall:

- Support the Bluetooth Device ID Profile, version 1.3 or higher.
- Use the company identifier from the Assigned Numbers specification assigned by the Bluetooth SIG as its Vendor ID value (VID). See http://www.bluetooth.org/Technical/AssignedNumbers/identifiers.htm (requires login). Bluetooth HID Profile accessories may use a VID assigned by the USB Implementers Forum (USB-IF at http://www.usb.org) if the manufacturer does not have a Bluetooth SIG company identifier.
- Use its VID value for the end product manufacturer.
- Not use the Company ID assigned to Apple by the Bluetooth SIG or the Vendor ID assigned to Apple by the USB Implementers Forum.
- Use the Vendor ID Source field to identify which organization assigned the value used in Vendor ID field value. See Section 5.6 of the *Bluetooth Device ID Profile Specification*.
- Use a ProductID value that uniquely identifies the product.
- Use a Version value that uniquely identifies the software version.

The Device ID record lets the device identify the implementation of the remote accessory. This is valuable information and can be used to bridge alternate interpretations of the Bluetooth specification when communicating with a remote accessory. Therefore it is important that the information in the Device ID record uniquely identify the implementation.

In the case of Bluetooth car kit devices, the same car kit might go into two different car models. Ideally the two car kits should have different ProductIDs. However, it is acceptable for them to have the same ProductID as long as they have identical hardware, software, and features. If the implementations differ at all, they should have different ProductIDs. The accessory can also use a secondary Device ID record to uniquely identify the product ID or model number.

36.11.2 Service Discovery Protocol (SDP)

To facilitate caching of Service Discovery Protocol (SDP) service records, every accessory that is compatible with a device shall:

- Support the ServiceDiscoveryServer Service Class.
- Support the ServiceDatabaseState attribute.

2021-04-23 | Copyright © 2021 Apple Inc. All Rights Reserved.

- The attribute's value shall change whenever any SDP service record or attributes within a record are added, removed, or modified.
- The attribute's value shall not change based on RFCOMM channel protocol parameters since devices query these values separately at connection time.

36.11.3 Hands-Free Profile (HFP)

Every accessory that is compatible with a device and supports the Handsfree Profile should meet the requirements of the *Bluetooth Hands-Free Profile Specification*, Version 1.5 or higher. Additional Apple requirements are specified in this section.

Remote accessories can use the Bluetooth *Hands-Free Profile* for phone communications. To achieve the best user experience, the remote accessory should support the following features, which are optional in the Bluetooth specification.

36.11.3.1 Remote Audio Volume Control

Every accessory that is compatible with a device and supports HFP should:

- Support Remote Audio Volume Control so the speaker volume on the Hands-Free accessory can be controlled from the device as described in Section 4.28 in the *Bluetooth Hands-Free Profile Specification* version 1.5.
- Set the Remote volume control bit in the Supported Features bitmap sent with the `AT+BRSF=` command.

In some situations it is easier for the user to control the output volume through the device instead of directly on the remote accessory. For example, a passenger (or-if the car is parked-the driver) in a car could use the volume slider on the phone to control the audio volume. Volume control synchronization is outlined in Section 4.48.2 in the *Bluetooth Hands-Free Profile Specification* version 1.5.

36.11.3.2 Indicator Event Reporting

Every accessory that is compatible with a device and supports HFP should use indicator events reporting and not perform repetitive polling of status.

iOS devices and Mac computers support all mandatory and optional indicators specified in HFP version 1.5 (service, call, callsetup, callheld, signal, roam, battchg). To minimize unnecessary polling of status using the `AT+CIND?` command, the remote accessory should enable indicator events reporting by sending an `AT+CMER` command. The device will then send a `+CIEV` event when there is a change in status of an indicator. The remote accessory should request the initial status using the `AT+CIND=?` and `AT+CIND?` commands, according to the HFP specification.

2021-04-23 | Copyright © 2021 Apple Inc. All Rights Reserved.

36.11.3.3 Voice Recognition Activation

Every accessory that is compatible with a device and supports HFP shall:

- Support Voice Recognition Activation, both AG and HF initiated as described in Section 4.25 in the *Bluetooth Hands-Free Profile Specification* version 1.5.
- Set the Voice Recognition Activation bit in the "SupportedFeatures" bitmap sent with the AT+BRSF= command.

iOS devices and Mac computers support voice recognition initiated by remote (Hands-Free) accessories and iOS (Audio Gateway) accessories.

36.11.3.4 Echo Cancellation and Noise Reduction

When echo cancellation and noise reduction are performed locally on a Hands-Free accessory, it should turn off echo cancellation and noise reduction on the device by sending an AT+NREC command, as described in Section 4.24 in the *Bluetooth Hands-Free Profile Specification* version 1.5.

iOS devices and Mac computers support echo cancellation and noise reduction; these features are active by default. If a Hands-Free accessory also does echo cancellation and noise reduction it needs to turn these features off on the device (the Audio Gateway). This avoids unnecessary degradation of audio quality due to double audio processing.

36.11.3.5 In-Band Ringing

Every accessory that is compatible with a device and supports HFP should also support In-Band Ringing as specified in Section 4.13.1 in the *Bluetooth Hands-Free Profile Specification* version 1.5. If the user sets a ring tone on the device, the same ring tone should sound on the hands-free accessory.

36.11.3.6 Synchronous Connection

Every accessory that is compatible with a device and supports HFP shall:

- Support eSCO parameter set S2 and S3 and accept requests for these settings. See Section 5.6 of the *Bluetooth Hands-Free Profile Specification* version 1.5.
- Request eSCO parameter set S2 or S3 when setting up a Synchronous Connection. Note that eSCO parameter set S1 should not be requested.
- Render audio within 40 ms after the SCO/eSCO connection has been set up.

The eSCO packet types offers retransmission of packets; traditional SCO packets are not retransmitted. This improves audio quality and the user's experience. The eSCO packet types 2-EV3 and 3-EV3 offer a greater time interval between packets, which can improve Wi-Fi performance and allow time for other concurrent Bluetooth connections to send data. Apple strongly recommends the use of 2-EV3 and

2021-04-23 | Copyright © 2021 Apple Inc. All Rights Reserved.

3-EV3 packets for SCO connections. Using HV3 packets is highly discouraged. HV3 packets require more link time and does not allow for retransmission of audio packets which impacts the audio performance in presence of RF interference.

36.11.3.7 Wide Band Speech

Every accessory that is compatible with a device and supports HFP should support Wide Band Speech as described in Section 5.7.4 of the Bluetooth *Hands-Free Profile* specification version 1.6. If Wide Band Speech is supported, it should support the T2 link parameter settings.

All devices running iOS 5 or later support Wide Band Speech. If both the device and the accessory support Wide Band Speech then Wide Band Speech link will be used for eSCO connection for use cases like cellular calls, FaceTime and Siri.

36.11.4 Message Access Profile (MAP)

Every accessory that is compatible with a device and supports the Message Access Profile shall:

- Support Message Notification as described in Section 4.1 of the *Bluetooth Message Access Profile Specification*, version 1.1.
- Register for notifications immediately after the connection is established, as described in Section 4.5 in the *Message Access Profile Specification*, version 1.1.

All devices running iOS 13.0 or later support MAP 1.1.

36.11.5 Audio/Video Remote Control Profile (AVRCP)

Every accessory that is compatible with a device and supports the Audio/Video Remote Control Profile should meet the requirements of the *Bluetooth Audio/Video Remote Control Profile Specification*, Version 1.4. Additional Apple requirements are specified in this section.

36.11.5.1 Supported Operations

iOS devices and Mac computers support the following operation_IDs in passthrough commands:

- Play
- Stop
- Pause
- Fast Forward
- Rewind
- Forward
- Backward

2021-04-23 | Copyright © 2021 Apple Inc. All Rights Reserved.

36.11.5.2 Repeat and Shuffle Modes

Every device supports Repeat and Shuffle modes in the role of an AVRCP target. An AVRCP controller may use `SetPlayerApplicationSettingValue` to set a value on the device and `GetPlayerApplicationSettingValue` to read a value, as described in Sections 6.5.4 and 6.4.3 of the *Bluetooth Audio/Video Remote Control Profile Specification* version 1.4.

36.11.5.3 Notifications

Every accessory that is compatible with a device and supports AVRCP should register for notifications and not perform repetitive polling to determine the status of the device.

Every device supports registering for notifications in the role of an AVRCP Target, as described in Section 6.7 of the *Bluetooth Audio/Video Remote Control Profile Specification* version 1.4. The commands `RegisterNotification` and `GetPlayStatus` are supported for these notifications:

- EVENT_PLAYBACK_STATUS_CHANGED
- EVENT_TRACK_CHANGED
- EVENT_NOW_PLAYING_CONTENT_CHANGED
- EVENT_AVAILABLE_PLAYERS_CHANGED
- EVENT_ADDRESSED_PLAYER_CHANGED
- EVENT_VOLUME_CHANGED

36.11.5.4 Play/Pause Button

All accessories that support AVRCP and implement a Play/Pause control surface shall confirm the playback status of the device via AVRCP Notifications (page 147) before sending a Play or Pause command, see Supported Operations (page 146). Specifically:

- If the device has notified the accessory that it is paused, pressing the accessory's Play/Pause control surface should send a Play command.
- If the device has notified the accessory that it is playing, pressing the accessory's Play/Pause control surface should send a Pause command.
- The accessory should not infer device playback status based on the number of times the Play/Pause control surface has been pressed.

36.11.5.5 Volume Handling

Every accessory that is compatible with a device and supports AVRCP should support Absolute Volume, as described in Section 6.13 of the *Bluetooth Audio/Video Remote Control Profile Specification* version 1.4.

Every device supports volume handling in the role of AVRCP Controller.

2021-04-23 | Copyright © 2021 Apple Inc. All Rights Reserved.

36.11.5.6 Browsing

Every accessory that is compatible with a device and supports Browsing (in controller role) as part of AVRCP shall:

- Not try to index or cache the entire library upon connection. The device may contain tens of thousands of media items, each present multiple times in the hierarchy.
- When browsing a specific folder, do not fetch all its items. Only fetch those that are displayed to the user. It may prefetch a few items to improve the responsiveness of the user interface.
- Not reorder items (e.g. alphabetically).
- Not assume UIDs to be statically defined, especially in the root folder. The ordering and UIDs of folders and items may change at any point in future releases.
- Send the `SetBrowsedPlayer` command after receiving an EVENT_UIDS_CHANGED notification.
- Not assume that the UID passed to the PlayItem command will result in the media player playing that UID.

Currently only the built-in Music app supports browsing. When switching between players, an EVENT_AVAILABLE_PLAYERS_CHANGED notification and an EVENT_ADDRESSED_PLAYER_CHANGED notification will be generated. The UI then needs to look at the feature bit mask of the listed player to determine whether browsing is currently available.

All devices running iOS 6.0 or later support AVRCP Browsing.

36.11.5.7 iOS App-Provided Metadata

An audio app running on a device may use the iOS Media Player Framework to provide metadata about the current audio stream. The device supplies this metadata to the accessory using AVRCP. Requirements and usage for these messages may be found in the `MPNowPlayingInfoCenter` class in Apple Media Player Framework documentation.

36.11.6 Advanced Audio Distribution Profile (A2DP)

See Advanced Audio Distribution Profile (A2DP) (page 133).

36.12 Audio Routing

This section describes how an accessory can differentiate between various audio contents coming from a device and use this information to decide playback behavior.

An accessory can receive audio data from the device via either of two Bluetooth profiles:

- HFP using eSCO channel
- A2DP using ACL channel

2021-04-23 | Copyright © 2021 Apple Inc. All Rights Reserved.

The device picks which channel to use depending on how the audio content is used. An audio path created for two way communication (such as phone calls or FaceTime) always uses the HFP (eSCO) route for sending audio data. Music and similar content uses the A2DP route. In the absence of a defined route, audio playback will default to the device.

36.12.1 Audio Data Received via HFP Profile

Most of the audio content sent via HFP (eSCO) routes requires two way communication. Cases where HFP (eSCO) is used include (but are not limited to) cellular calls, FaceTime, and voice mail.

The accessory speaker and microphone should be dedicated to the HFP (eSCO) route and not mixed/muxed with any other audio sources.

36.12.2 Audio Data Received via A2DP Profile

Audio content transferred via A2DP profiles can be broadly classified into two categories:

- Audio content from music, video, or game-like applications.
- System-generated sound for alerts and notifications.

36.12.2.1 Differentiating Audio Content from System Sounds

Music-like content can be differentiated from system sound by adding support for Audio/Video Remote Control Profile (AVRCP) version 1.3 or later. The AVRCP profile allows an accessory to be aware of the audio playback state in the device, using notifications. See Audio/Video Remote Control Profile (AVRCP) (page 146).

When a device initiates audio playback over an A2DP channel for playing music content, an AVRCP notification EVENT_PLAYBACK_STATUS_CHANGED is sent to indicate that playback status has changed to play state. See Section 6.7.2 of the *Audio/Video Remote Control Profile* specification, version 1.4. This indicates that audio data via the A2DP profile contains music. When a device initiates audio playback over an A2DP channel for playing system sound, no AVRCP notification is sent.

Figure 36-1 (page 150) and Figure 36-2 (page 150) show the difference between the notifications for music playback and for system sounds.

Copyright © 2021 Apple Inc. All Rights Reserved.

Figure 36-1 Initiate Audio Playback (e.g. music)

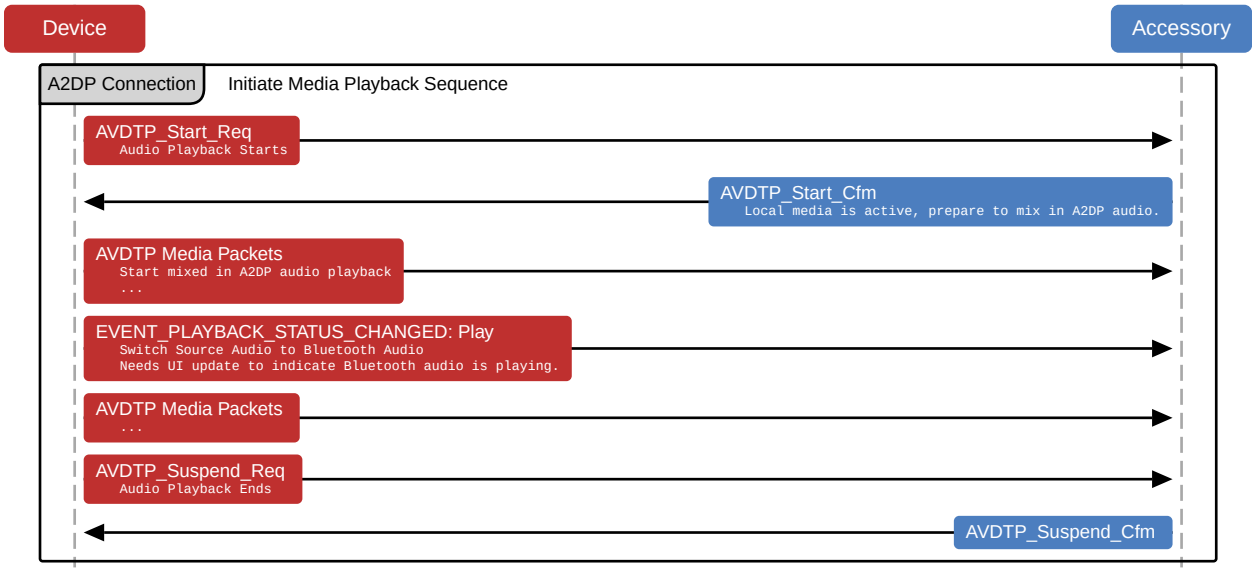

Figure 36-2 Initiate System Sound (e.g. turn-by-turn directions)

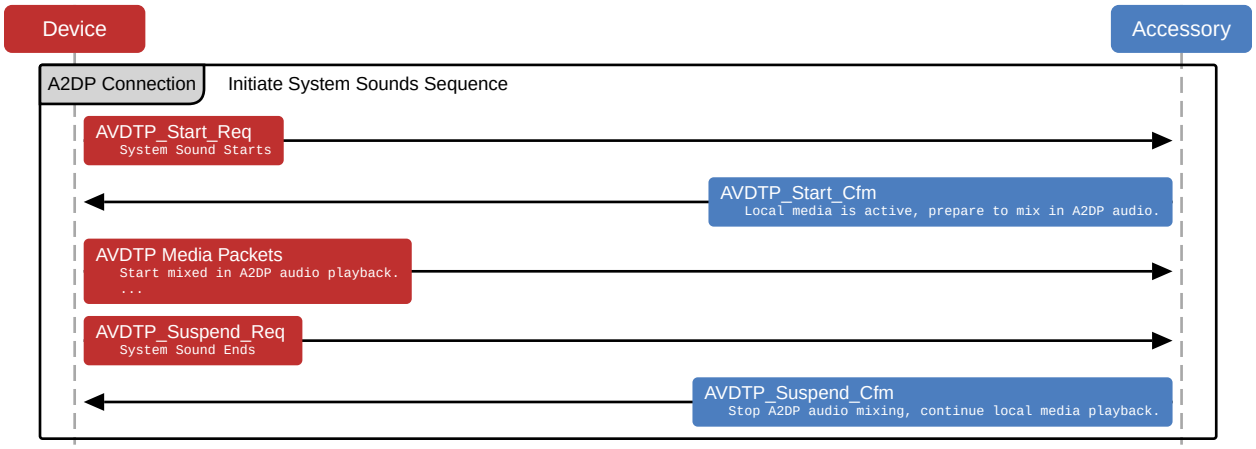

36.12.2.2 Expected Audio Routing Behavior for A2DP

The accessory should tune its audio routing behavior based on audio content over the A2DP channel.

If audio data contains music, then it is expected that the accessory speakers are dedicated to audio data coming via the Bluetooth link and any other audio playback is paused. If audio data contains system sound, then it is expected that the accessory can render audio as desired. If the accessory is playing audio from a different source, then system sound data can be mixed with the existing track for playback; it is not necessary to pause existing audio playback on the device.

Copyright © 2021 Apple Inc. All Rights Reserved.

36.13 HID

When implementing HID over Bluetooth, the accessory:

- Should support Bluetooth HID Profile 1.1.
- Should support Sniff Mode for Low Power Consumption (page 139).
- Should use the following parameters in SDP for sniff subrating:
  - HIDSSRHostMaxLatency - 450 ms (720 slots)
  - HIDSSRHostMinTimeout - 45 ms (72 slots)
- Should use a typical report packet of 22 bytes or less. This is small enough to fit into a DH1 packet with L2CAP and HID header.

2021-04-23 | Copyright © 2021 Apple Inc. All Rights Reserved.

37. Bluetooth Low Energy (BLE)

The *Bluetooth 4.0* specification introduces Bluetooth Low Energy (BLE), a wireless technology targeted for accessories with limited battery resources. If Bluetooth Low Energy is supported, the accessory should follow the guidelines in this section.

37.1 Role

The accessory should implement either the Peripheral role as defined in the *Bluetooth 4.0* specification, Volume 3, Part C, Section 2.2.2.3 or the Broadcaster role, as defined in Section 2.2.2.1.

37.2 Advertising Channels

The accessory should advertise on all three advertising channels (37, 38, and 39) at each advertising event. See the *Bluetooth 4.0* specification, Volume 6, Part B, Section 4.4.2.1.

37.3 Advertising PDU

The accessory should use one of the following advertising PDUs:

- ADV_IND
- ADV_NOCONN_IND
- ADV_SCAN_IND

ADV_DIRECT_IND should not be used. See the *Bluetooth 4.0* specification, Volume 6, Part B, Section 2.3.1.

37.4 Advertising Data

The advertising data sent by the accessory should contain at least the following information as described in the *Bluetooth Core Specification Supplement*, Part A:

- Flags
- TX Power Level

2021-04-23 | Copyright © 2021 Apple Inc. All Rights Reserved.

- Local Name
- Services

The Local Name should match the accessory's markings and packaging and not contain ':' or ';'.

The accessory may put the Local Name and the TX Power Level data in the SCAN_RSP PDU if, for example, it needs to reduce power consumption or not all of the advertising data fit into the advertising PDU. Note that, depending on its state, the device may not always perform active scanning.

The primary services should always be advertised in the advertising PDU. Secondary services should not be advertised. Services not significant to the primary use case of the accessory may be omitted if space is limited in the Advertising PDU.

The advertising data and the scan response data in the SCAN_RSP PDU should comply with the formatting guidelines in the *Bluetooth 4.0* specification, Volume 3, Part C, Section 18: it starts with a length field, followed by AD Type and AD Data.

37.5 Advertising Interval

The accessory should first use the recommended advertising interval of 20 ms for at least 30 seconds.

If it is not discovered within the initial 30 seconds, Apple recommends using one of the following longer intervals to increase chances of discovery by the device:

- 152.5 ms
- 211.25 ms
- 318.75 ms
- 417.5 ms
- 546.25 ms
- 760 ms
- 852.5 ms
- 1022.5 ms
- 1285 ms

Note:
Longer advertising intervals usually result in longer discovery and connect times, but may lower accessory power consumption.

2021-04-23 | Copyright © 2021 Apple Inc. All Rights Reserved.

37.6 Connection Parameters

The accessory is responsible for the connection parameters used for the Low Energy connection. The accessory should request connection parameters appropriate for its use case by sending an L2CAP Connection Parameter Update Request at the appropriate time. See the *Bluetooth 4.0* specification, Volume 3, Part A, Section 4.20 for details.

The connection parameter request may be rejected if it does not meet the following guidelines:

- Peripheral Latency of up to 30 connection intervals.
- Supervision Timeout from 2 seconds to 6 seconds.
- Interval Min of at least 15 ms.
- Interval Min is a multiple of 15 ms.
- One of the following:
  - Interval Max at least 15 ms greater than Interval Min.
  - Interval Max and Interval Min both set to 15 ms.
- Interval Max * (Peripheral Latency + 1) of 2 seconds or less.
- Supervision Timeout greater than Interval Max * (Peripheral Latency + 1) * 3.

Note that if an accessory requests both an Interval Min and Interval Max of 15 ms, some devices will scale the interval to 30 ms to balance power and performance constraints.

If Bluetooth Low Energy HID is one of the connected services of an accessory, a connection interval down to 11.25 ms may be accepted by the device.

The device will not read or use the parameters in the Peripheral Preferred Connection Parameters characteristic. See the *Bluetooth 4.0* specification, Volume 3, Part C, Section 12.5.

37.7 Data Packet Length Extension

Data Packet Length Extension is an enhancement introduced in the *Bluetooth 4.2* specification which increases the maximum data length from 27 to 251. Using a longer per-packet data length improves radio efficiency, greatly increases application data rates, and boosts battery life. See the *Bluetooth 5.0* specification, Volume 6, Part B, Section 4.6.6 for details.

2021-04-23 | Copyright © 2021 Apple Inc. All Rights Reserved.

Figure 37-1 Data Packet Length Extension

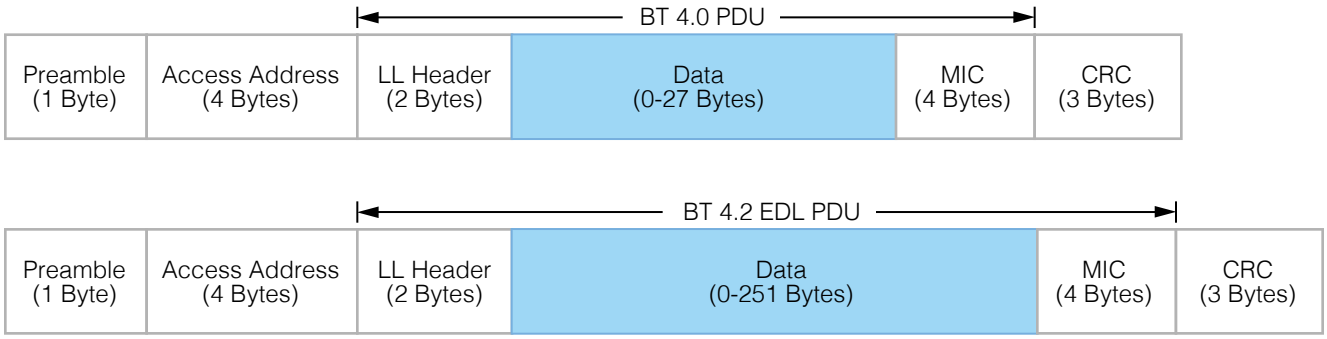

Accessories should support Data Packet Length Extension for best performance with devices.

iOS devices and Mac computers operating as the Central will negotiate optimal data packet lengths based on various factors, such as connection event length, system topology, and protocol.

37.8 Privacy

The accessory should be able to resolve a Resolvable Private Address in all situations. Due to privacy concerns, the device will use a Random Device Address as defined in the *Bluetooth 4.0* specification, Volume 3, Part C, Section 10.8.

37.9 Permissions

The accessory should not require special permissions, such as pairing, authentication, or encryption to discover services and characteristics. It may require special permissions only for access to a characteristic value or a descriptor value. See the *Bluetooth 4.0* specification, Volume 3, Part G, Section 8.1, fifth paragraph.

37.10 Pairing

The accessory should not request pairing until an ATT request is rejected using the Insufficient Authentication error code. See the *Bluetooth 4.0* specification, Volume 3, Part F, Section 4 for details.

If, for security reasons, the accessory requires a bonded relationship with the Central, the Peripheral should reject the ATT request using the Insufficient Authentication error code, as appropriate. As a result, the device may proceed with the necessary security procedures.

2021-04-23 | Copyright © 2021 Apple Inc. All Rights Reserved.

Similarly, if the device acts as a Central and a GATT server, it may reject an ATT request using the Insufficient Authentication error code. The accessory should initiate the security procedure for pairing in response.

Pairing may require user authorization depending on device. Once an accessory is paired with a device, it shall retain the distributed keys of both central and peripheral for future use. If the pairing is no longer required, the accessory shall delete both sets of keys.

37.11 MTU Size

An accessory that supports packet length extension shall perform the packet length update procedure before performing the Exchange MTU Request handshake, see Data Packet Length Extension (page 154).

Devices will support and request an MTU size larger than the default during the Exchange MTU Request handshake. See the *Bluetooth 4.0* specification, Volume 3, Part F, Section 3.2.8.

When operating as ATT client, the device will request the optimal MTU size based on factors such as the Bluetooth topology, connection event length, maximum data length, and protocol (GATT or connection-oriented L2CAP).

An accessory operating as ATT server should select an MTU that is equal to or greater than the device's MTU request.

37.12 Services

37.12.1 Generic Access Profile Service

The accessory should implement the Device Name characteristic per the *Bluetooth 4.0* specification, Volume 3, Part C, Section 12.1. The Device Name characteristic should be writeable.

37.12.2 Generic Attribute Profile Service

The accessory shall implement the Service Changed characteristic only if the accessory has the ability to change its services during its lifetime.

The device may use the Service Changed characteristic to determine if it can rely on previously read (cached) information from the device. See the *Bluetooth 4.0* specification, Volume 3, Part G, Section 7.1.

2021-04-23 | Copyright © 2021 Apple Inc. All Rights Reserved.

37.12.3 Device Information Service

The accessory shall implement the Device Information Service. The service UUID for this service should not be advertised in the Advertising Data. The following characteristics should be supported:

- Manufacturer Name String
- Model Number String
- Firmware Revision String
- Software Revision String

37.12.4 Available Services

With iOS 7.0, any device makes Battery Service, Current Time Service and Apple Notification Center Service (ANCS) available to an accessory. The Current Time Service supports the current time and local time information characteristics. The service does not provide an "Adjust Reason" when the current time changes. ANCS uses `7905F431-B5CE-4E99-A40F-4B1E122D00D0` as its UUID.

These services are not guaranteed to be available immediately after connection and the accessory shall support Characteristic Value Indication of the Service Changed characteristic (see *Bluetooth 4.0* specification, Volume 3, Part G, Section 7.1) to be notified when the services become available. The device will maintain a connection to an accessory as long as it is paired and uses one of the available services.

37.13 GATT Server

With iOS 6.0, applications may contribute services and characteristics to the GATT server that the device makes available to the accessory. The recommendations in this section apply to the accessory in this case.

The following services are implemented internally by iOS and shall not be published by third party iOS applications:

- Generic Attribute Profile Service
- Generic Access Profile Service
- Bluetooth Low Energy HID Service
- Battery Service
- Current Time Service
- Apple Notification Center Service

The device implements the GAP Service Changed characteristic, because the database contents can change at any time. The accessory should therefore support the Characteristic Value Indication of this characteristic and, upon receiving indications, invalidate its database cache accordingly. See the *Bluetooth 4.0* specification, Volume 3, Part G, Section 7.1.

2021-04-23 | Copyright © 2021 Apple Inc. All Rights Reserved.

The accessory should minimize the use of ATT/GATT requests and commands and only send what is necessary. For example, do not use GATT Discover All Services when the accessory is looking for specific services. Use Discover Primary Service By Service UUID instead. Less airtime equals less power consumption and better performance for both the accessory and the device.

When third party iOS applications discover services on the accessory, the following services are used internally by iOS and are filtered out from the list of discovered services:

- Generic Attribute Profile Service
- Generic Access Profile Service
- Bluetooth Low Energy HID Service
- Apple Notification Center Service

The accessory should be robust enough to handle any error gracefully. Pairing and Characteristic Value reads/writes may fail if the application that owns the service is not in the foreground and is not entitled to run in the background.

If an ATT Prepare Write Request is used, all queued attributes are contained within the same GATT Service.

2021-04-23 | Copyright © 2021 Apple Inc. All Rights Reserved.

Connectors

38. USB-A Receptacle

Accessories may incorporate a USB-A receptacle to:

- Provide power to a device.

38.1 Mechanical

The USB-A receptacle shall meet or exceed all applicable USB-IF mechanical specifications.

38.2 Electrical

The USB-A receptacle shall meet or exceed all applicable USB-IF electrical specifications.

Copyright © 2021 Apple Inc. All Rights Reserved.

39. USB-C Plug

Accessories may incorporate a USB-C plug to:

- Draw power from Apple branded or MFi certified USB power sources.
- Draw power from USB-C Current sources.
- Draw power from USB Power Delivery sources.
- Draw power from USB Dedicated Charging Ports and USB hosts, such as a Mac.
- Enable USB connection to a Mac.

Examples of accessories that may benefit from including a USB-C plug include cables, battery packs, and adapters.

39.1 Mechanical

The USB-C plug shall have an assigned *Connector* Test ID from the USB-IF.

39.2 Electrical

Accessories shall not directly electrically connect a USB-C plug to the device.

Accessories that draw power from the USB-C plug shall:

- Correctly identify all Apple branded or MFi certified USB power sources that use USB D+/D- Resistor Networks (page 128).
- Correctly identify all USB Dedicated Charging Ports (DCP) as defined in the *USB Battery Charging 1.2* specification.
- Correctly identify all USB-C Current (page 132) sources.
- Enumerate as a USB device when connected to a USB host, such as a Mac, and:
  - Not draw more than 100 mA of current until they have been successfully enumerated.
  - Request no more than 500 mA of charging current in their USB device descriptor.
- Not draw more power than the USB power source claims it is capable of providing via one of the above methods.

Accessories may also correctly identify all USB Power Delivery (page 131) sources.

Copyright © 2021 Apple Inc. All Rights Reserved.

39.3 Test Procedures

39.3.1 Connector Test ID

Verify that the accessory's USB-C plug has an assigned *Connector* Test ID from the USB-IF.

39.3.2 Drawing Power

This procedure applies to accessories that draw power via the USB-C plug.

The following equipment is needed:

- Apple 29W USB-C Power Adapter
- Bundled USB-C power adapter (if applicable)

Verify that the accessory correctly identifies all Apple branded or bundled power sources:

1. Verify that each USB-C power adapter is correctly identified and provides power.

Verify that the accessory correctly identifies a Mac:

1. Verify that the Mac is correctly identified and provides power.

2021-04-23 | Copyright © 2021 Apple Inc. All Rights Reserved.

40. USB-C Receptacle

Accessories may incorporate a USB-C receptacle to:

- Provide power to a device.
- Draw power from Apple branded or MFi certified USB power sources.
- Draw power from USB-C Current sources.
- Draw power from USB Power Delivery sources.
- Draw power from USB Dedicated Charging Ports and USB hosts, such as a Mac.
- Enable USB connection to a Mac.

Accessories shall not integrate a USB-C receptacle to enable passthrough USB charge/sync of a device.

Examples of accessories that may benefit from including a USB-C receptacle include AC Power Adapters (page 56), Battery Packs (page 59), and speakers.

40.1 Mechanical

The USB-C receptacle shall be USB-IF certified and have a *Connector* Test ID from the USB-IF.

40.2 Electrical

Accessories shall not directly electrically connect a USB-C receptacle to the device.

40.2.1 Drawing Power

Accessories that draw power from the USB-C receptacle shall:

- Correctly identify all Apple branded or MFi certified USB power sources that use USB D+/D- Resistor Networks (page 128).
- Correctly identify all USB Dedicated Charging Ports (DCP) as defined in the *USB Battery Charging 1.2* specification.
- Correctly identify all USB-C Current (page 132) sources.
- Enumerate as a USB device when connected to a USB host, such as a Mac, and:
  - Not draw more than 100 mA of current until they have been successfully enumerated.
  - Request no more than 500 mA of charging current in their USB device descriptor.

Copyright © 2021 Apple Inc. All Rights Reserved.

- Not draw more power than the USB power source claims it is capable of providing via one of the above methods.

Accessories may also correctly identify all USB Power Delivery (page 131) sources.

40.2.2 Providing Power

Accessories that provide power to a device via a USB-C receptacle:

- Shall provide at least 15 W (3 A at 5.0 V) of power.
- Shall support USB-C Current (page 132).
- Should support USB Power Delivery (page 131).
- Should label the receptacle indicating how much power is supplied in watts.

40.3 Test Procedures

40.3.1 Connector Test ID

Verify that the accessory's USB-C receptacle has an assigned *Connector* Test ID from the USB-IF.

40.3.2 Drawing Power

This procedure applies to accessories that draw power via the USB-C receptacle.

The following equipment is needed:

- Apple USB-C Charge Cable (1 m)
- Apple USB-C Charge Cable (2 m)
- Bundled USB-C to USB-C cable (if applicable)
- Bundled USB-A to USB-C cable (if applicable)
- 3rd-party USB-A to USB-C cable
- Apple 5W USB Power Adapter
- Apple 10W USB Power Adapter
- Apple 18W USB Power Adapter
- Apple 12W USB Power Adapter
- Apple 29W USB-C Power Adapter
- Apple 30W USB-C Power Adapter
- Bundled USB-C power adapter (if applicable)
- Bundled USB-A power adapter (if applicable)
- MFi USB-C power adapter(s)
- MFi USB-A power adapter(s)

Copyright © 2021 Apple Inc. All Rights Reserved.

Verify that the accessory correctly identifies all Apple branded or bundled power adapters:

1. Using each USB-A to USB-C cable, verify that each USB-A power adapter is correctly identified and provides power.
2. Using each USB-C to USB-C cable, verify that each USB-C power adapter is correctly identified and provides power.

Verify that the accessory correctly identifies a Mac:

1. Using each USB-A to USB-C cable and USB-C to USB-C cable, verify that the Mac is correctly identified and provides power.

Verify that the accessory correctly identifies MFi power adapters:

1. Using each USB-A to USB-C cable, verify that each MFi USB-A power adapter is correctly identified and provides power.
2. Using each USB-C to USB-C cable, verify that each MFi USB-C power adapter is correctly identified and provides power.

40.3.3 Providing Power

This procedure applies to accessories that provide power via the USB-C receptacle.

The following equipment is needed:

- Apple USB-C to Lightning Cable (1 m)
- Apple USB-C to Lightning Cable (2 m)
- Apple USB-C Charge Cable (1 m)
- Apple USB-C Charge Cable (2 m)
- Bundled USB-C to USB-C cable (if applicable)

Verify that the accessory correctly provides power to devices:

1. Using each USB-C to Lightning cable, verify that the accessory uses USB-C Current or USB-PD to identify at least 15 W of power providing capability.
2. Using each USB-C to Lightning cable, verify that the accessory provides power to the device.

Verify that the accessory correctly identifies a Mac:

1. Using each USB-C to USB-C cable, verify that the accessory is correctly identified and provides power to the Mac.

2021-04-23 | Copyright © 2021 Apple Inc. All Rights Reserved.

References

41. Device Dimensional Drawings

This chapter contains the following dimensional drawings:

- iPhone 12 Pro Max 1 of 2 (page 171)
- iPhone 12 Pro Max 2 of 2 (page 172)
- iPhone 12 Pro 1 of 2 (page 173)
- iPhone 12 Pro 2 of 2 (page 174)
- iPhone 12 1 of 2 (page 175)
- iPhone 12 2 of 2 (page 176)
- iPhone 12 mini 1 of 2 (page 177)
- iPhone 12 mini 2 of 2 (page 178)
- iPhone SE (2nd generation) (page 179)
- iPhone 11 Pro Max (page 180)
- iPhone 11 Pro (page 181)
- iPhone 11 (page 182)
- iPhone XS Max (page 183)
- iPhone XS (page 184)
- iPhone XR (page 185)
- iPhone X (page 186)
- iPhone 8 Plus (page 187)
- iPhone 8 (page 188)
- iPhone 7 Plus (page 189)
- iPhone 7 (page 190)
- iPhone 6s Plus (page 191)
- iPhone 6s (page 192)
- iPhone 6 Plus (page 193)
- iPhone 6 (page 194)
- iPhone 5s & iPhone SE (page 195)
- iPhone 5c (page 196)
- iPhone 5 (page 197)
- iPad Pro (12.9-inch) 5th Generation 1 of 5 (page 198)
- iPad Pro (12.9-inch) 5th Generation 2 of 5 (page 199)
- iPad Pro (12.9-inch) 5th Generation 3 of 5 (page 200)
- iPad Pro (12.9-inch) 5th Generation 4 of 5 (page 201)
- iPad Pro (12.9-inch) 5th Generation 5 of 5 (page 202)
- iPad Pro (11-inch) 3rd Generation 1 of 5 (page 203)

2021-04-23 | Copyright © 2021 Apple Inc. All Rights Reserved.

- iPad Pro (11-inch) 3rd Generation 2 of 5 (page 204)
- iPad Pro (11-inch) 3rd Generation 3 of 5 (page 205)
- iPad Pro (11-inch) 3rd Generation 4 of 5 (page 206)
- iPad Pro (11-inch) 3rd Generation 5 of 5 (page 207)
- iPad Air (4th generation) 1 of 5 (page 208)
- iPad Air (4th generation) 2 of 5 (page 209)
- iPad Air (4th generation) 3 of 5 (page 210)
- iPad Air (4th generation) 4 of 5 (page 211)
- iPad Air (4th generation) 5 of 5 (page 212)
- iPad Pro (12.9-inch) 4th Generation 1 of 5 (page 213)
- iPad Pro (12.9-inch) 4th Generation 2 of 5 (page 214)
- iPad Pro (12.9-inch) 4th Generation 3 of 5 (page 215)
- iPad Pro (12.9-inch) 4th Generation 4 of 5 (page 216)
- iPad Pro (12.9-inch) 4th Generation 5 of 5 (page 217)
- iPad Pro (11-inch) 2nd Generation 1 of 5 (page 218)
- iPad Pro (11-inch) 2nd Generation 2 of 5 (page 219)
- iPad Pro (11-inch) 2nd Generation 3 of 5 (page 220)
- iPad Pro (11-inch) 2nd Generation 4 of 5 (page 221)
- iPad Pro (11-inch) 2nd Generation 5 of 5 (page 222)
- iPad (7th generation) & iPad (8th generation) 1 of 3 (page 223)
- iPad (7th generation) & iPad (8th generation) 2 of 3 (page 224)
- iPad (7th generation) & iPad (8th generation) 3 of 3 (page 225)
- iPad Air (3rd generation) with Wi-Fi 1 of 3 (page 226)
- iPad Air (3rd generation) with Wi-Fi 2 of 3 (page 227)
- iPad Air (3rd generation) with Wi-Fi 3 of 3 (page 228)
- iPad Air (3rd generation) with Wi-Fi + Cellular 1 of 3 (page 229)
- iPad Air (3rd generation) with Wi-Fi + Cellular 2 of 3 (page 230)
- iPad Air (3rd generation) with Wi-Fi + Cellular 3 of 3 (page 231)
- iPad mini (5th generation) with Wi-Fi 1 of 3 (page 232)
- iPad mini (5th generation) with Wi-Fi 2 of 3 (page 233)
- iPad mini (5th generation) with Wi-Fi 3 of 3 (page 234)
- iPad mini (5th generation) with Wi-Fi + Cellular 1 of 3 (page 235)
- iPad mini (5th generation) with Wi-Fi + Cellular 2 of 3 (page 236)
- iPad mini (5th generation) with Wi-Fi + Cellular 3 of 3 (page 237)
- iPad Pro (12.9-inch) 3rd Generation 1 of 3 (page 238)
- iPad Pro (12.9-inch) 3rd Generation 2 of 3 (page 239)
- iPad Pro (12.9-inch) 3rd Generation 3 of 3 (page 240)
- iPad Pro (11-inch) 1 of 3 (page 241)
- iPad Pro (11-inch) 2 of 3 (page 242)
- iPad Pro (11-inch) 3 of 3 (page 243)

2021-04-23 | Copyright © 2021 Apple Inc. All Rights Reserved.

- iPad Pro (12.9-inch) 2nd Generation with Wi-Fi (page 244)
- iPad Pro (12.9-inch) 2nd Generation with Wi-Fi + Cellular (page 245)
- iPad Pro (12.9-inch) 2nd Generation Magnet/Hall Effect Sensors 1 of 2 (page 246)
- iPad Pro (12.9-inch) 2nd Generation Magnet/Hall Effect Sensors 2 of 2 (page 247)
- iPad Pro (10.5-inch) with Wi-Fi (page 248)
- iPad Pro (10.5-inch) with Wi-Fi + Cellular (page 249)
- iPad Pro (10.5-inch) Magnet/Hall Effect Sensors 1 of 2 (page 250)
- iPad Pro (10.5-inch) Magnet/Hall Effect Sensors 2 of 2 (page 251)
- iPad (5th and 6th generation) with Wi-Fi + Cellular (page 252)
- iPad (5th and 6th generation) Magnet/Hall Effect Sensors 1 of 2 (page 253)
- iPad (5th and 6th generation) Magnet/Hall Effect Sensors 2 of 2 (page 254)
- iPad Pro (9.7-inch) with Wi-Fi (page 255)
- iPad Pro (9.7-inch) with Wi-Fi + Cellular (page 256)
- iPad Pro (9.7-inch) Magnet/Hall Effect Sensors 1 of 2 (page 257)
- iPad Pro (9.7-inch) Magnet/Hall Effect Sensors 2 of 2 (page 258)
- iPad Pro (12.9-inch) 1st Generation with Wi-Fi (page 259)
- iPad Pro (12.9-inch) 1st Generation with Wi-Fi + Cellular (page 260)
- iPad Pro (12.9-inch) 1st Generation Magnet/Hall Effect Sensors 1 of 2 (page 261)
- iPad Pro (12.9-inch) 1st Generation Magnet/Hall Effect Sensors 2 of 2 (page 262)
- iPad mini 4 with Wi-Fi (page 263)
- iPad mini 4 with Wi-Fi + Cellular (page 264)
- iPad mini 4 Magnet/Hall Effect Sensors (page 265)
- iPad Air 2 with Wi-Fi (page 266)
- iPad Air 2 with Wi-Fi + Cellular (page 267)
- iPad mini 2 & iPad mini 3 with Wi-Fi (page 268)
- iPad mini 2 & iPad mini 3 with Wi-Fi + Cellular (page 269)
- iPad Air with Wi-Fi (page 270)
- iPad Air with Wi-Fi + Cellular (page 271)
- iPad mini with Wi-Fi (page 272)
- iPad mini with Wi-Fi + Cellular (page 273)
- iPad (4th generation) with Wi-Fi (page 274)
- iPad (4th generation) with Wi-Fi + Cellular (page 275)
- iPod touch (6th generation) & iPod touch (7th generation) (page 276)
- iPod touch (5th generation) (page 277)
- Apple Watch Series 6, 44 mm (page 278)
- Apple Watch Series 6, 40 mm (page 279)
- Apple Watch SE, 44 mm (page 280)
- Apple Watch SE, 40 mm (page 281)
- Apple Watch Series 5, 44 mm (page 282)
- Apple Watch Series 5, 40 mm (page 283)

2021-04-23 | Copyright © 2021 Apple Inc. All Rights Reserved.

- Apple Watch Series 5 Ceramic, 44 mm (page 284)
- Apple Watch Series 5 Ceramic, 40 mm (page 285)
- Apple Watch Series 4, 44 mm (page 286)
- Apple Watch Series 4, 40 mm (page 287)
- Apple Watch Series 3 Ceramic, 42 mm (page 288)
- Apple Watch Series 3 Ceramic, 38 mm (page 289)
- Apple Watch Series 3 Metal, 42 mm (page 290)
- Apple Watch Series 3 Metal, 38 mm (page 291)
- Apple Watch Series 2 Ceramic, 42 mm (page 292)
- Apple Watch Series 2 Ceramic, 38 mm (page 293)
- Apple Watch Series 2 Metal, 42 mm (page 294)
- Apple Watch Series 2 Metal, 38 mm (page 295)
- Apple Watch (1st generation) & Apple Watch Series 1, 42 mm (page 296)
- Apple Watch (1st generation) & Apple Watch Series 1, 38 mm (page 297)
- AirPods Pro Wireless Charging Case (page 298)
- AirPods Wireless Charging Case (page 299)
- AirPods Pro (page 300)
- AirPods (page 301)
- AirTag (page 302)

2021-04-23 | Copyright © 2021 Apple Inc. All Rights Reserved.

41.1 iPhone 12 Pro Max 1 of 2

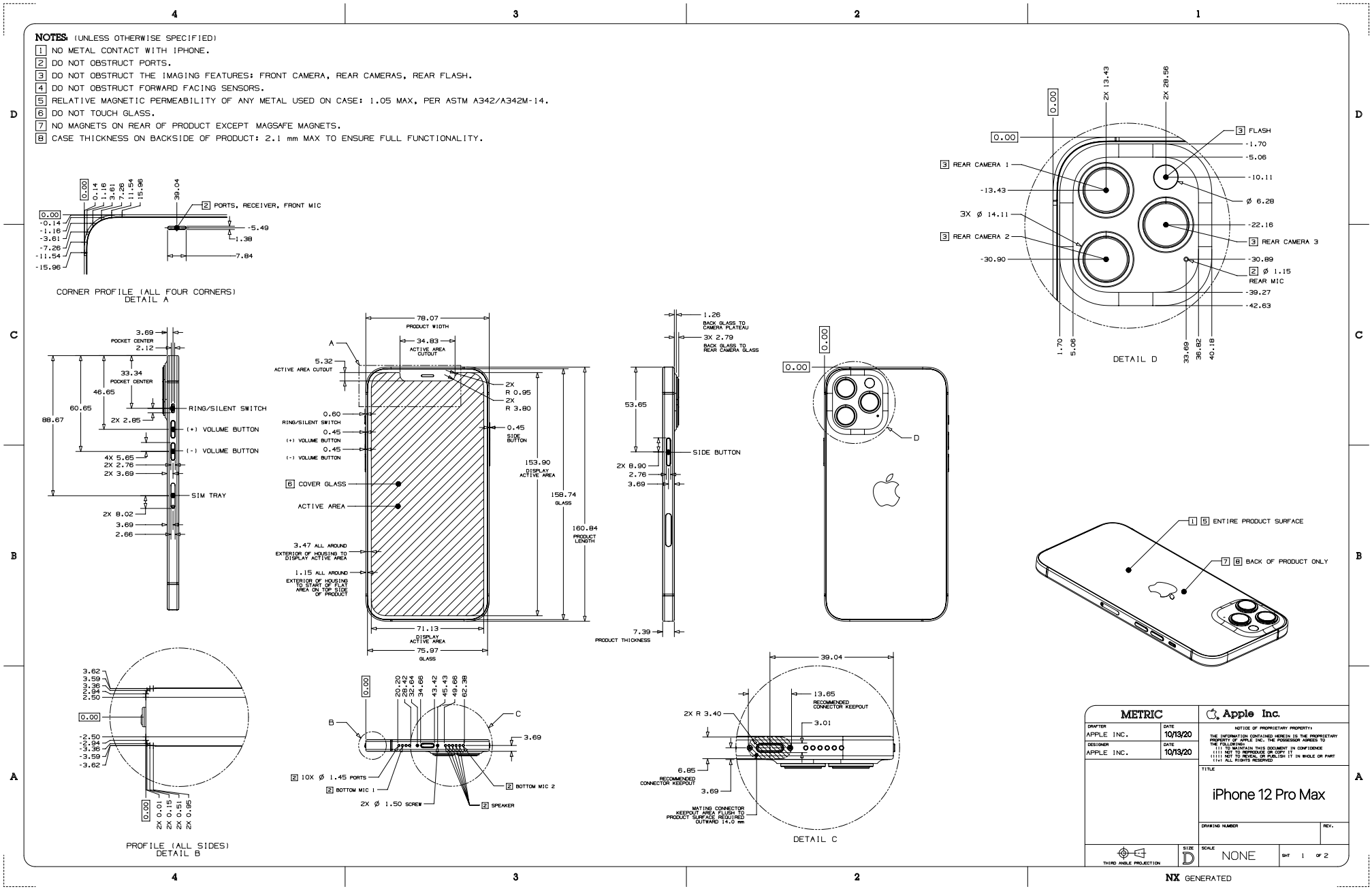

41.2 iPhone 12 Pro Max 2 of 2

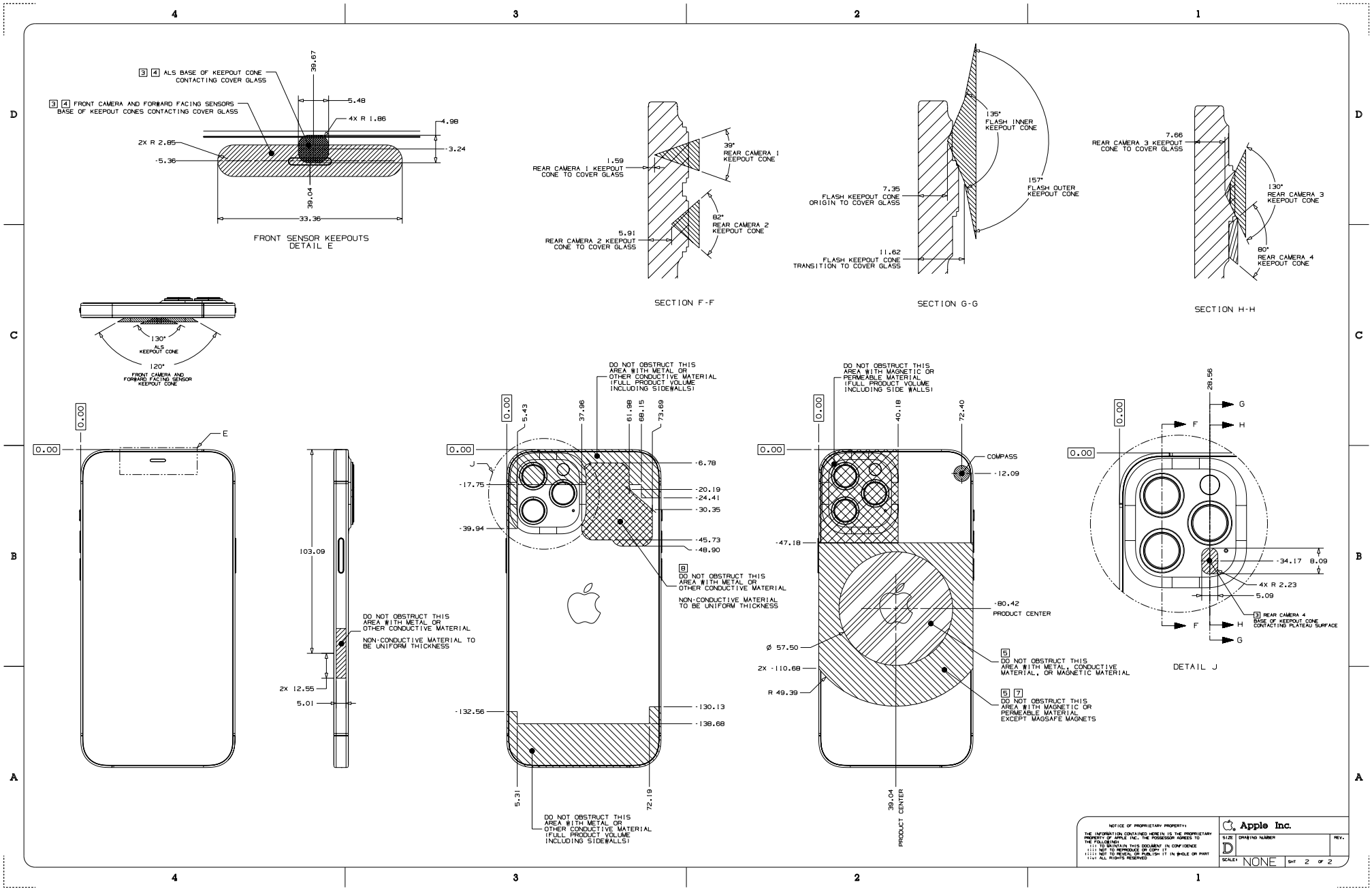

41.3 iPhone 12 Pro 1 of 2

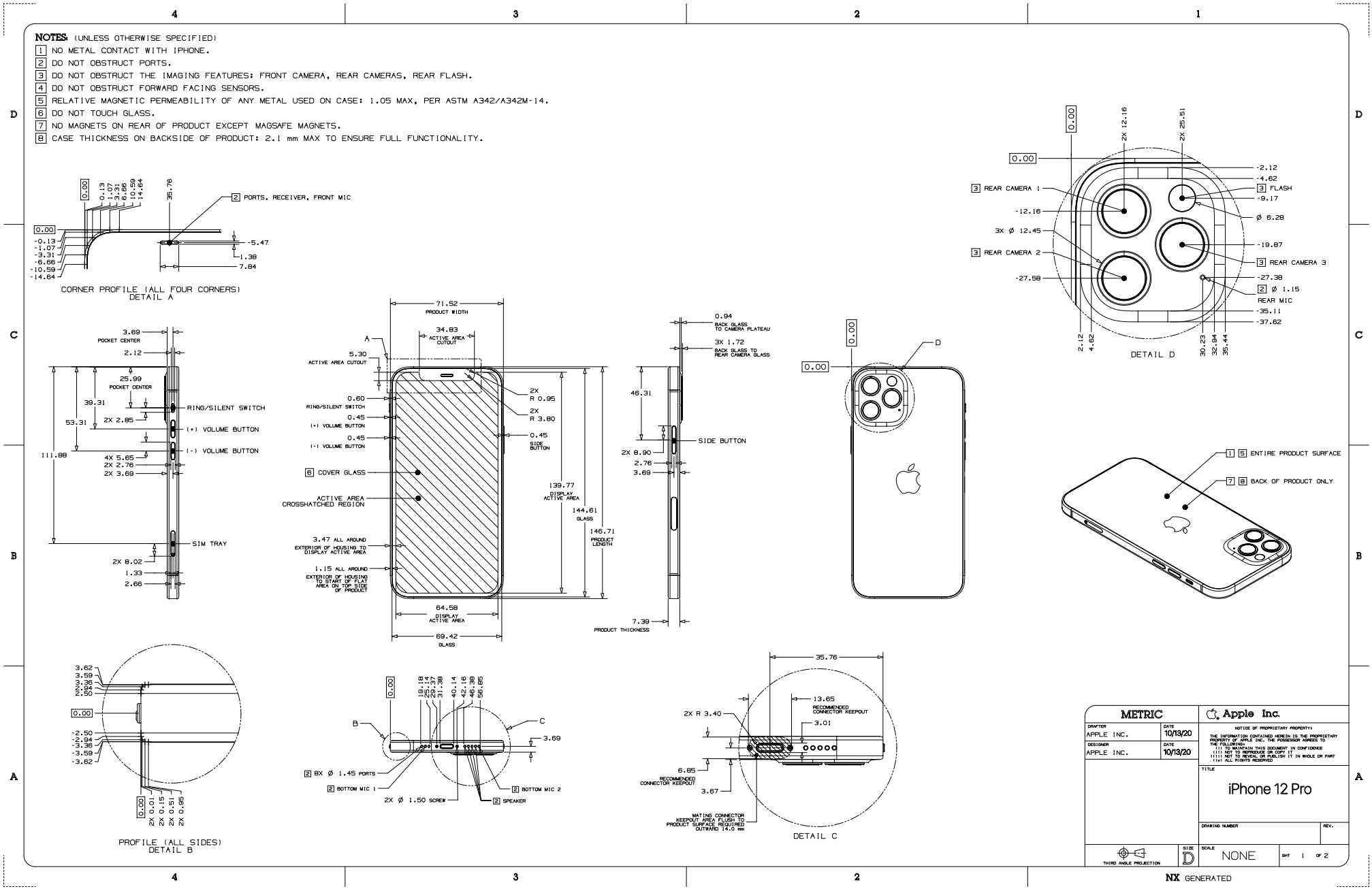

41.4 iPhone 12 Pro 2 of 2

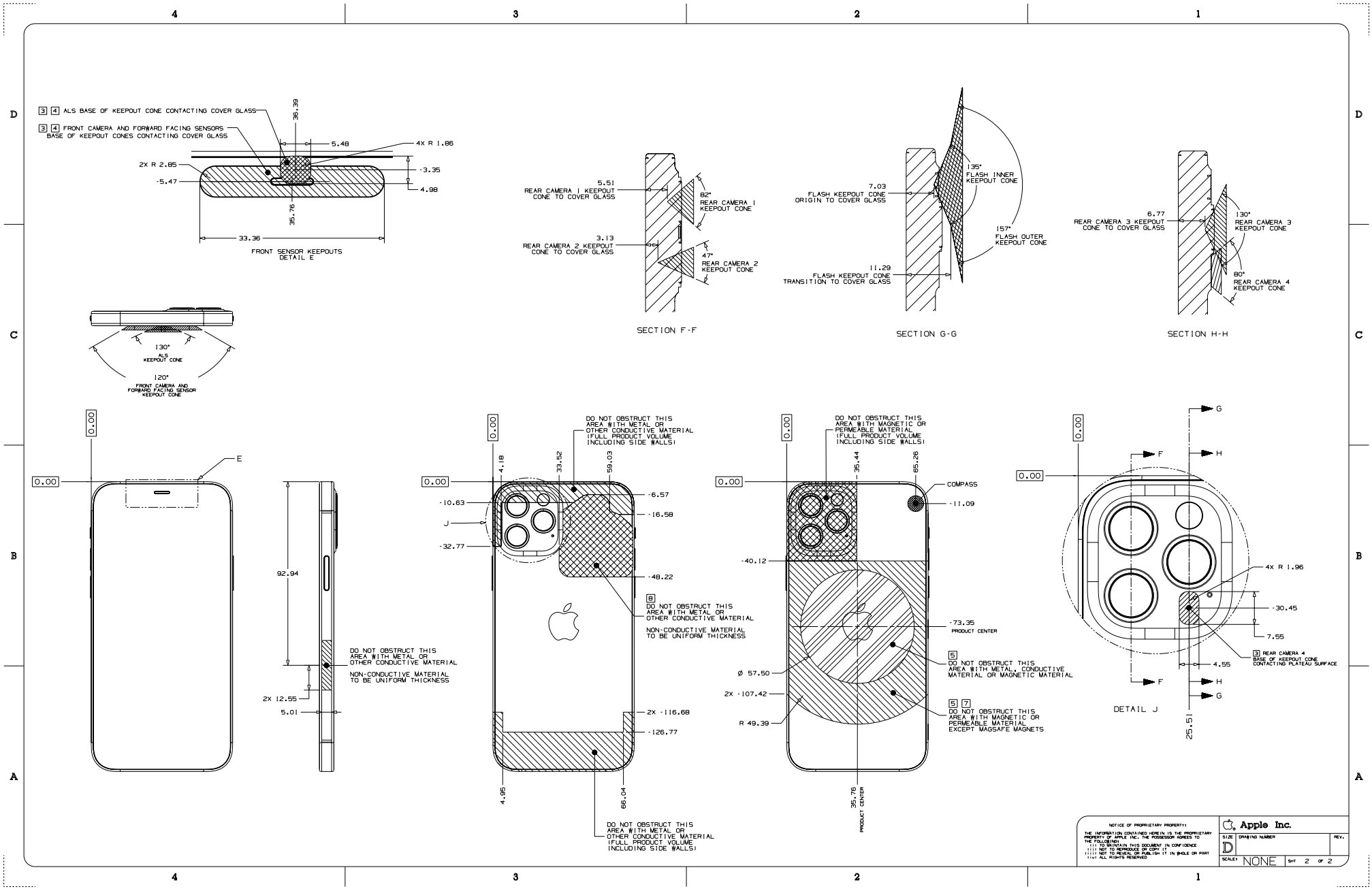

41.5 iPhone 12 1 of 2

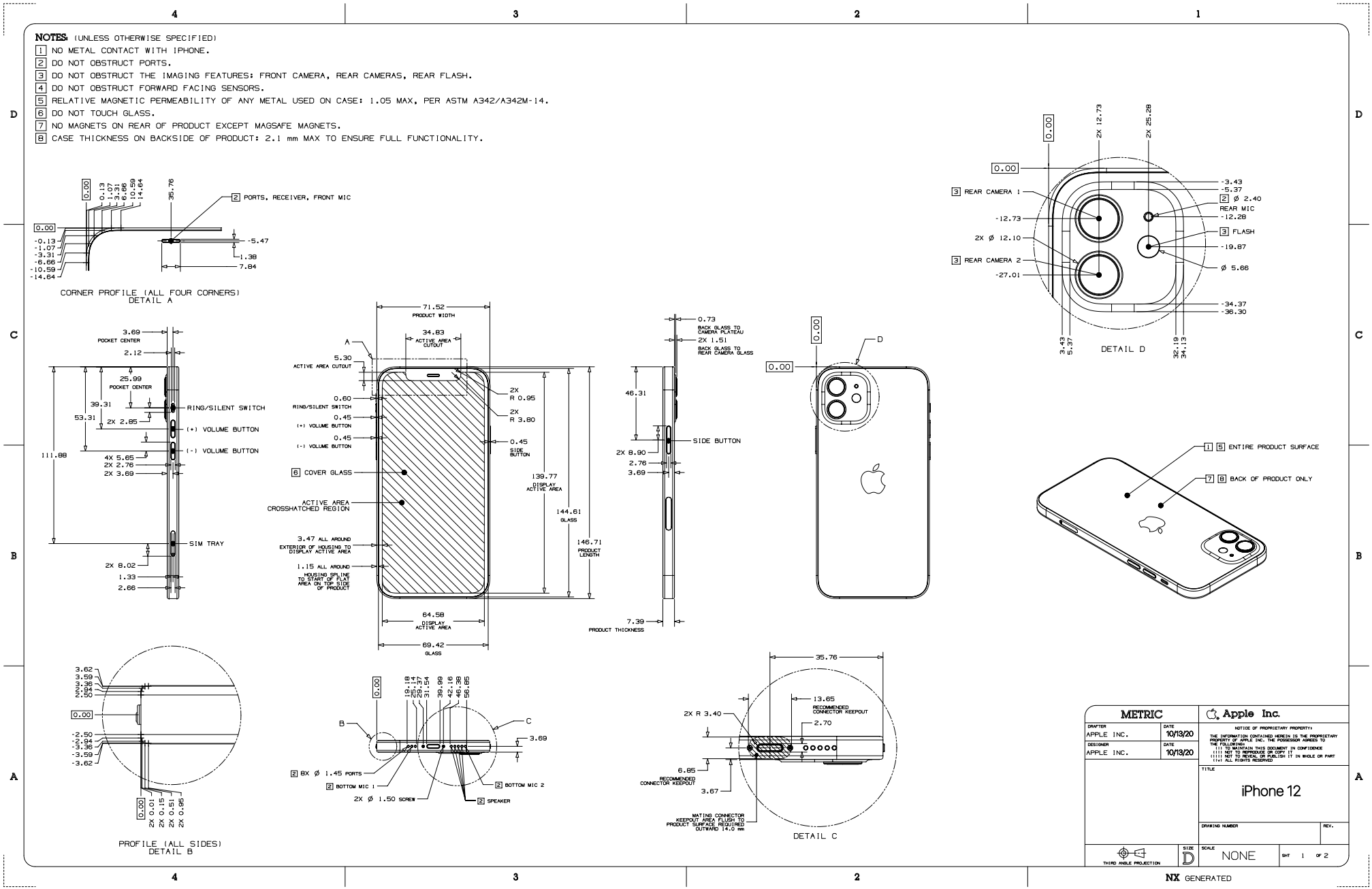

41.6 iPhone 12 2 of 2

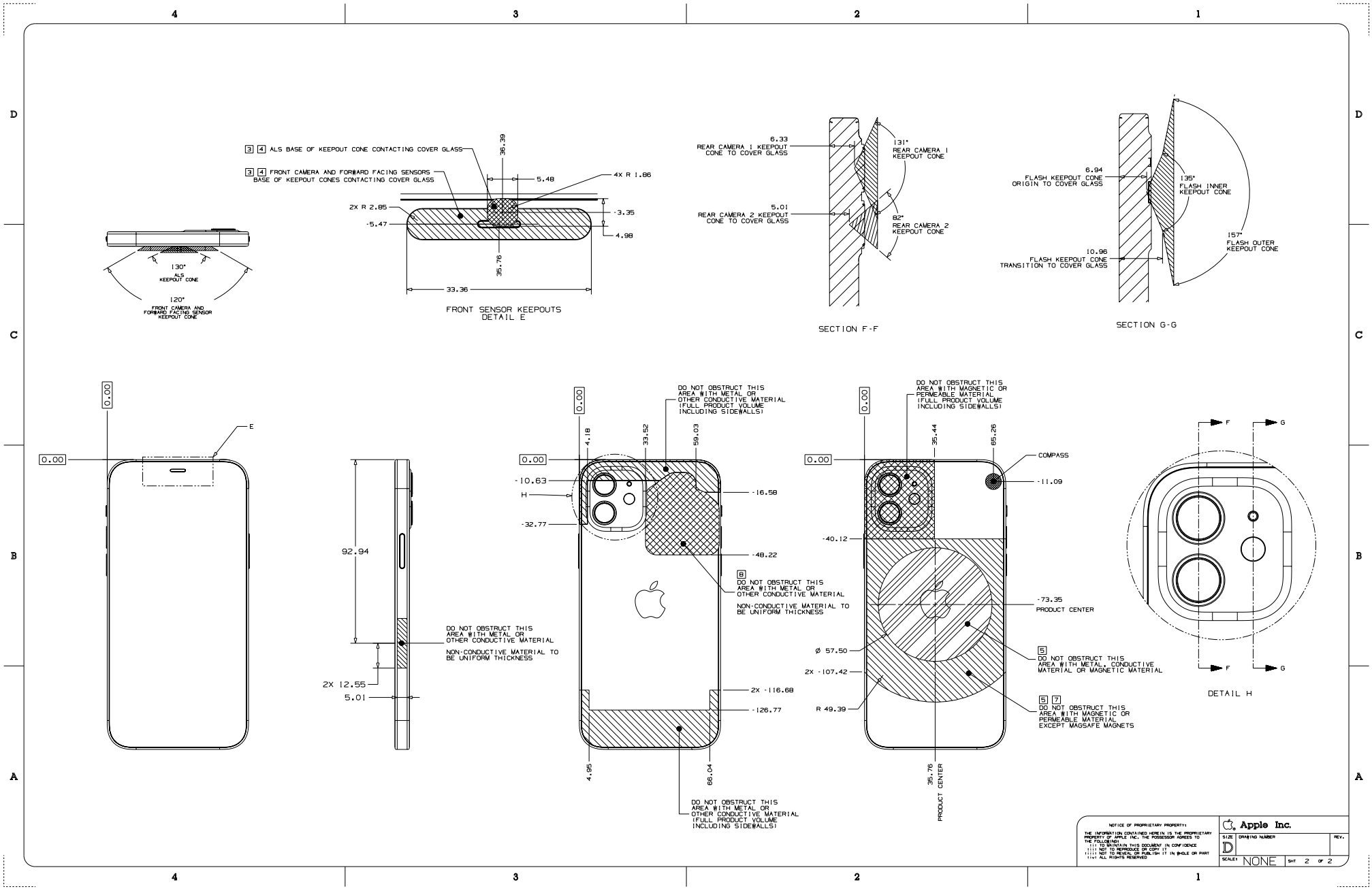

41.7 iPhone 12 mini 1 of 2

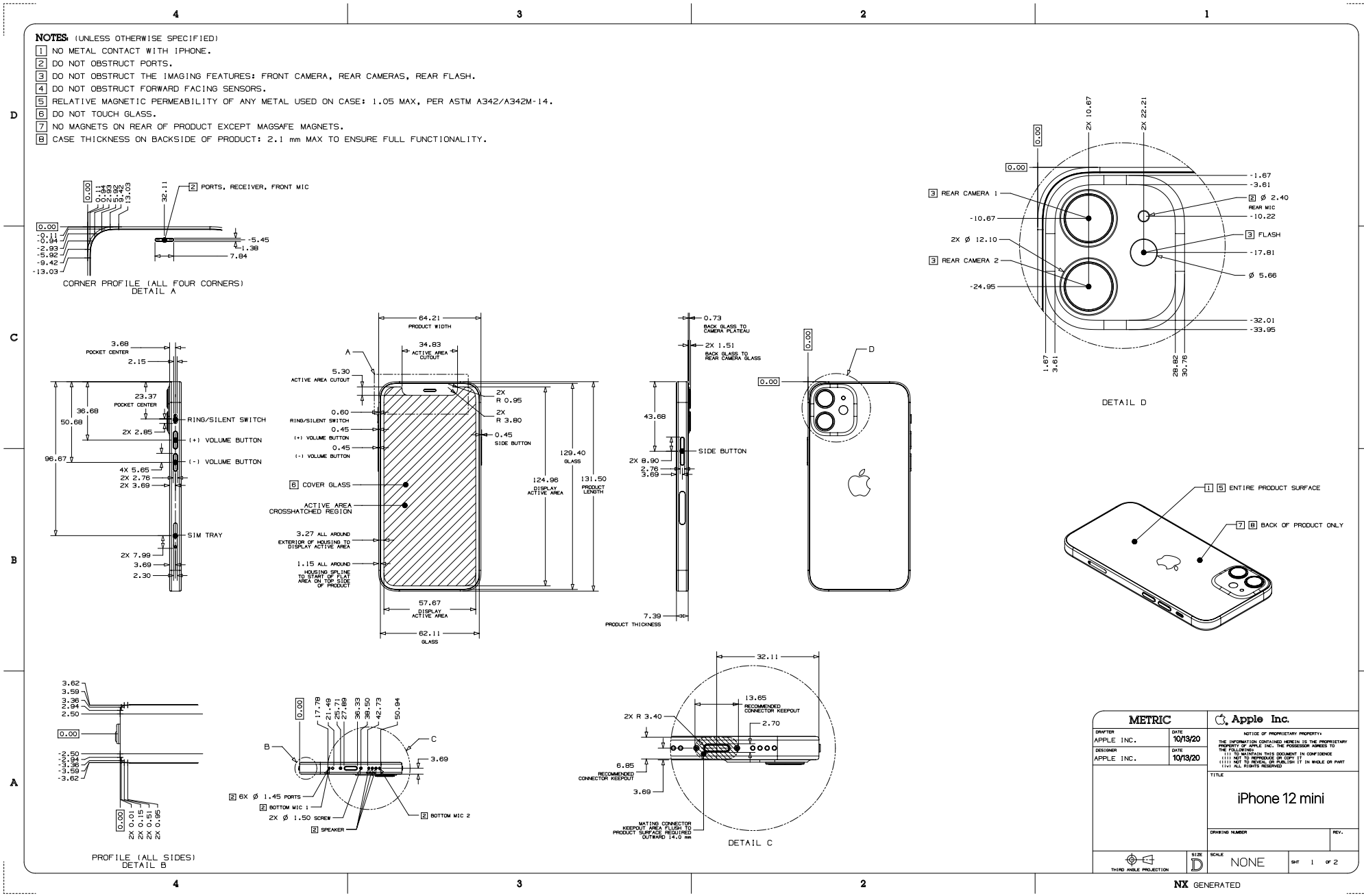

41.8 iPhone 12 mini 2 of 2

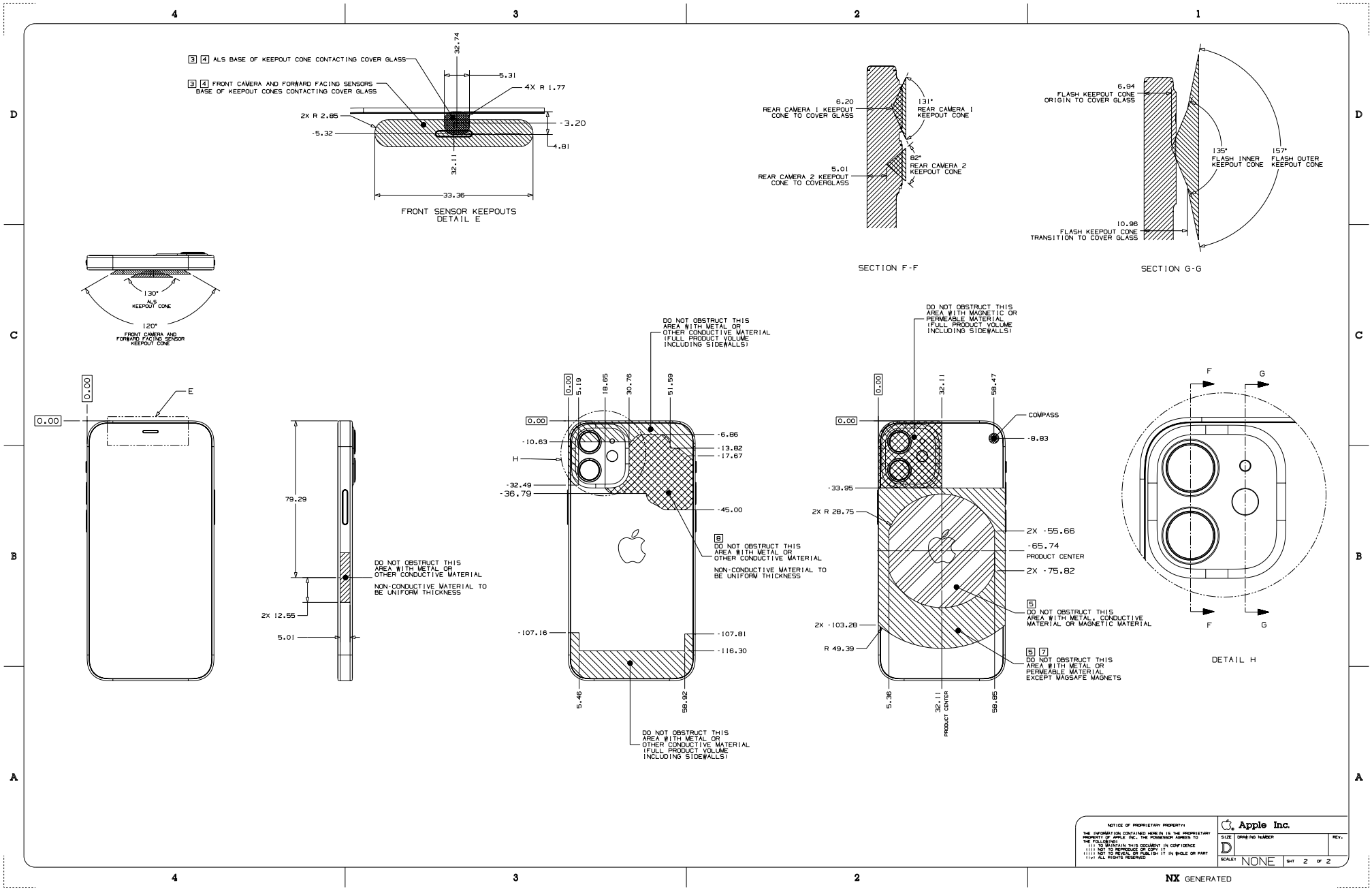

41.9 iPhone SE (2nd generation)

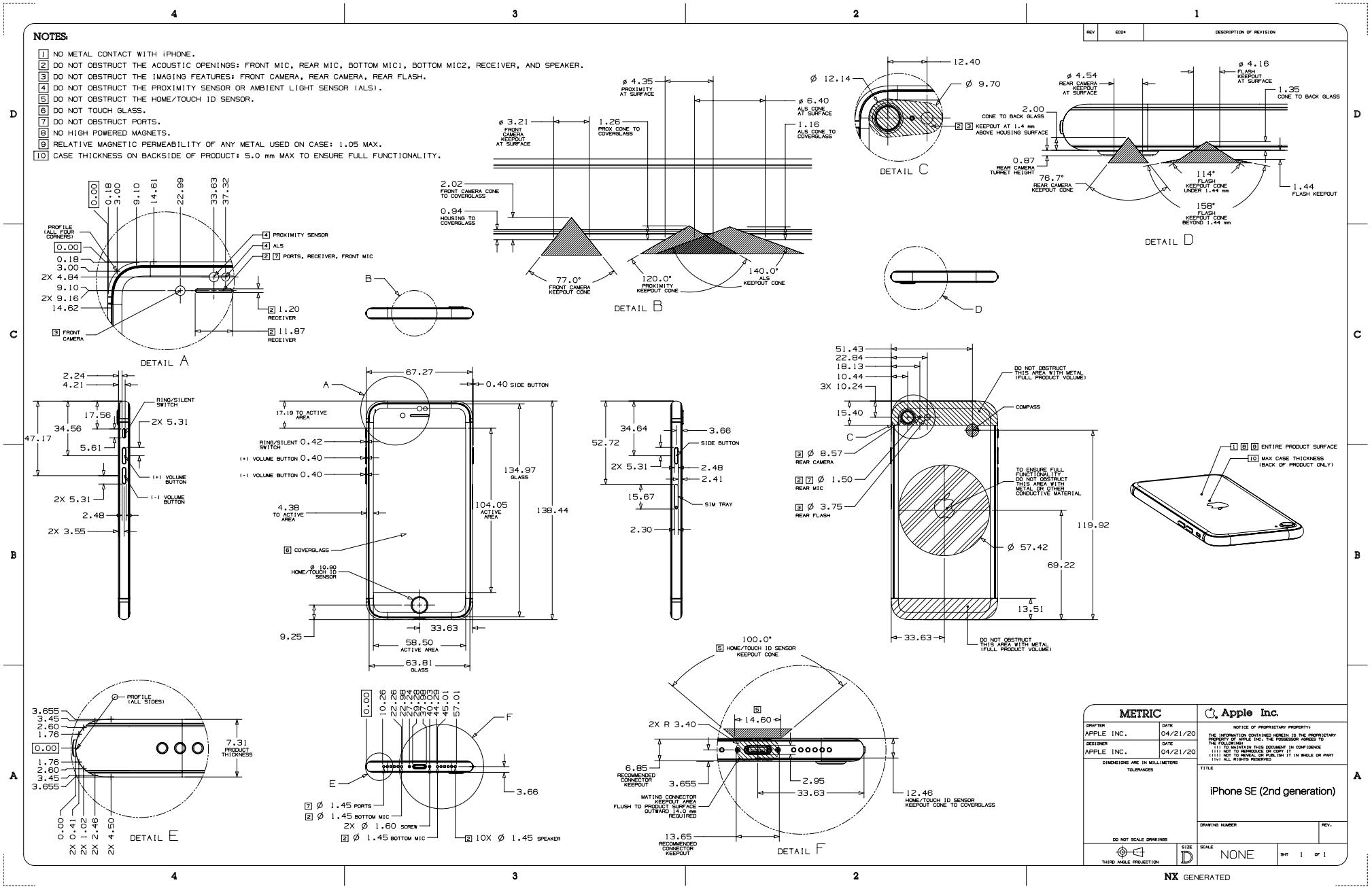

41.10 iPhone 11 Pro Max

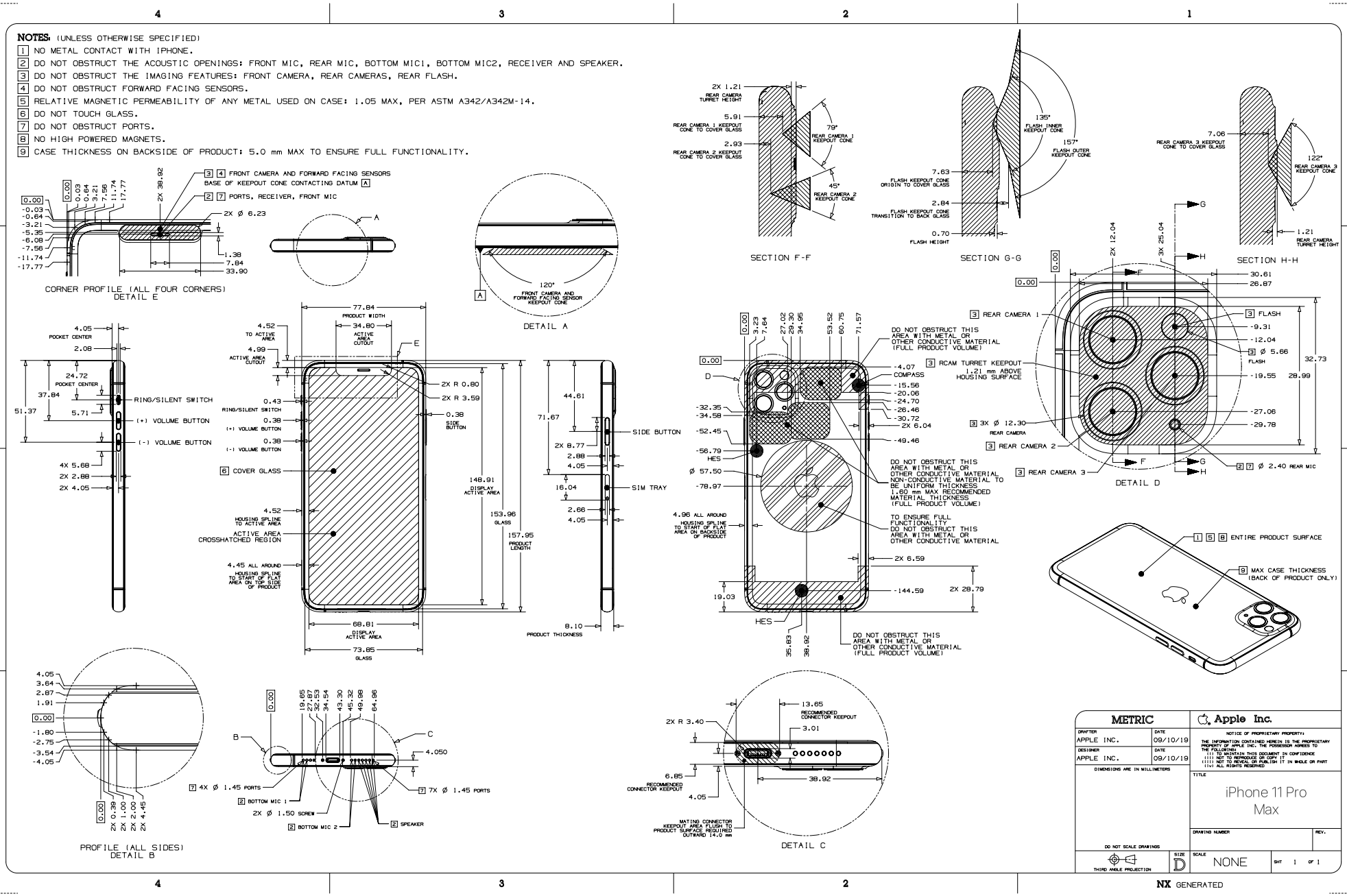

41.11 iPhone 11 Pro

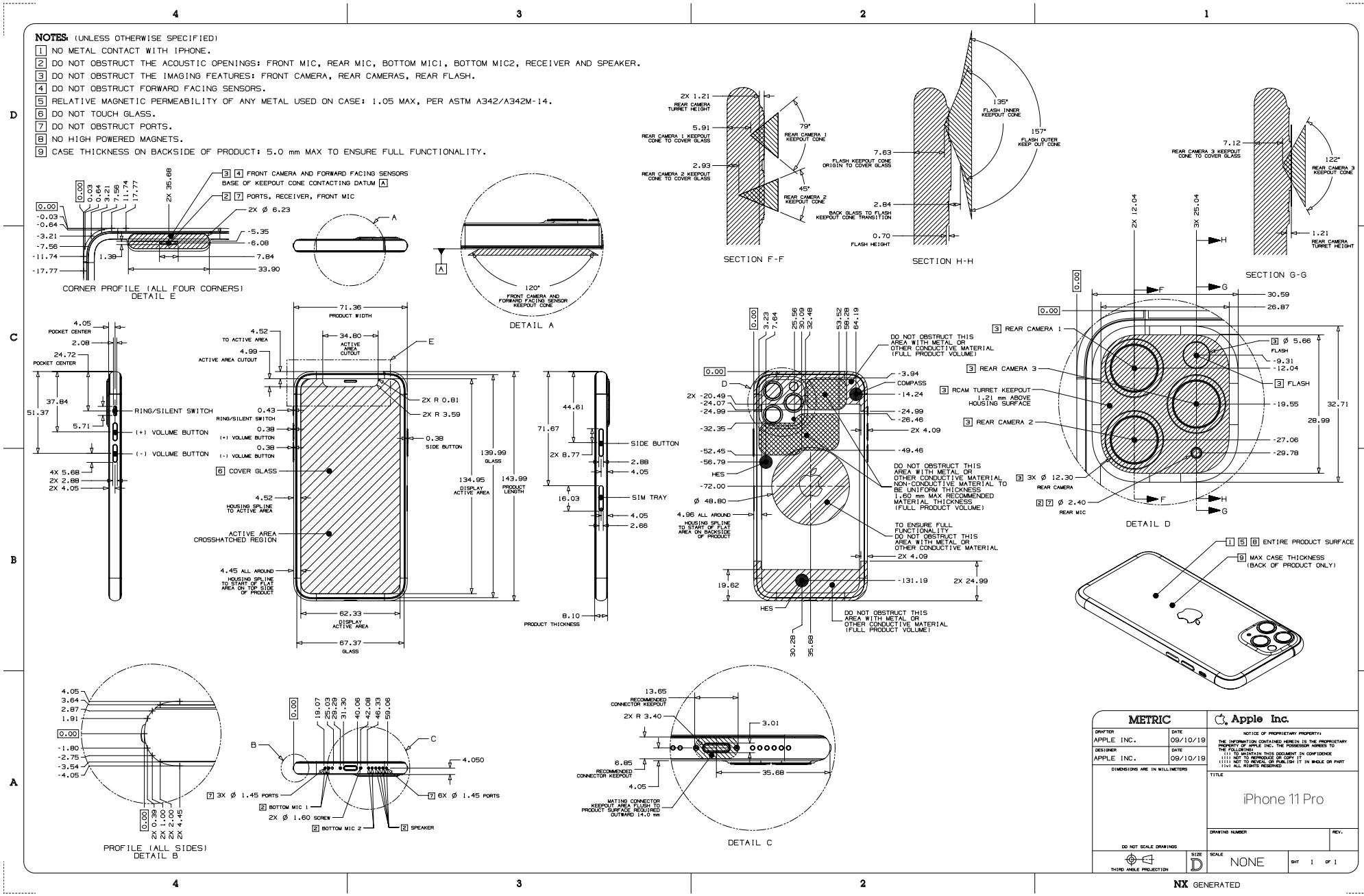

41.12 iPhone 11

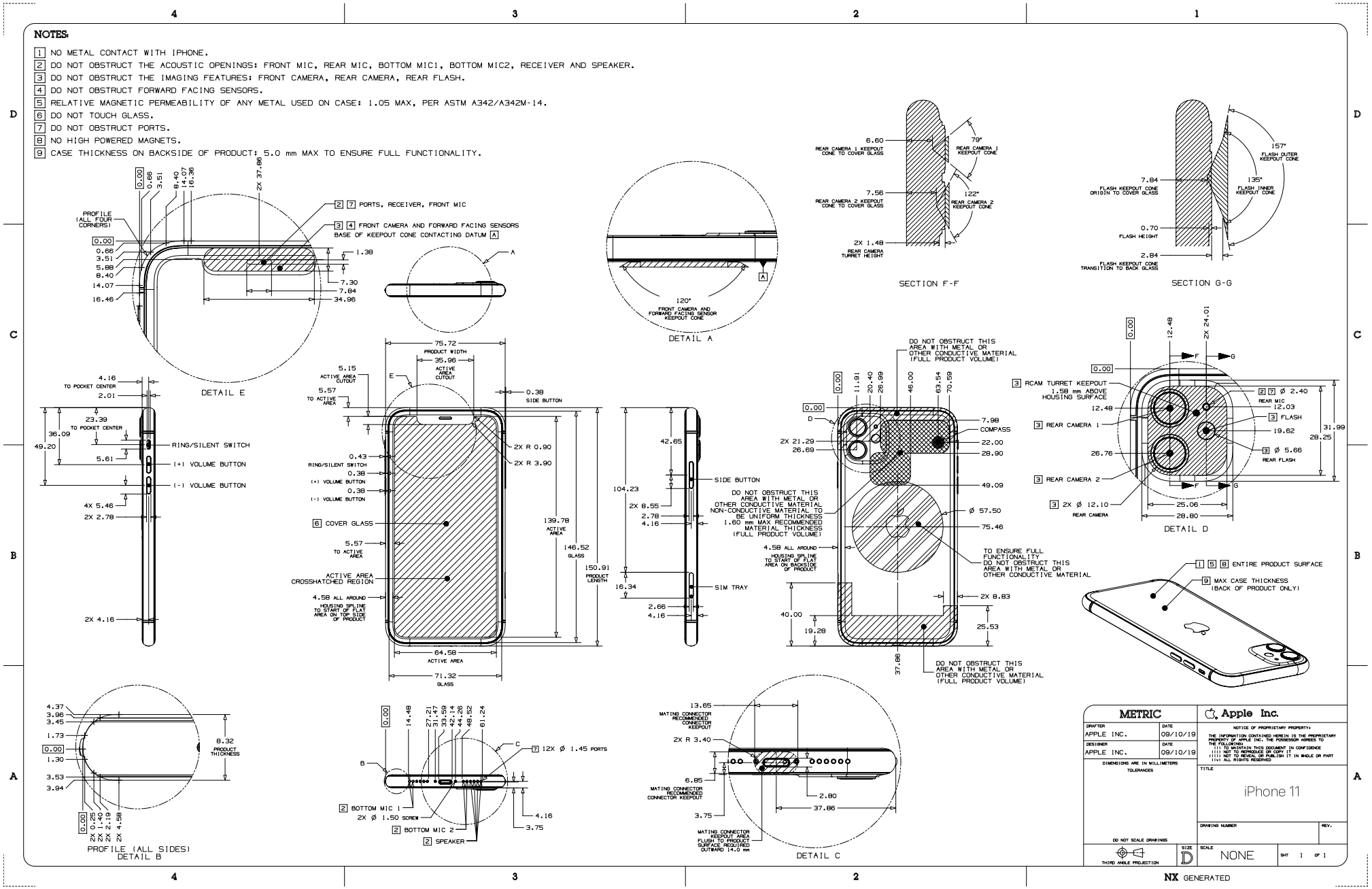

41.13 iPhone XS Max

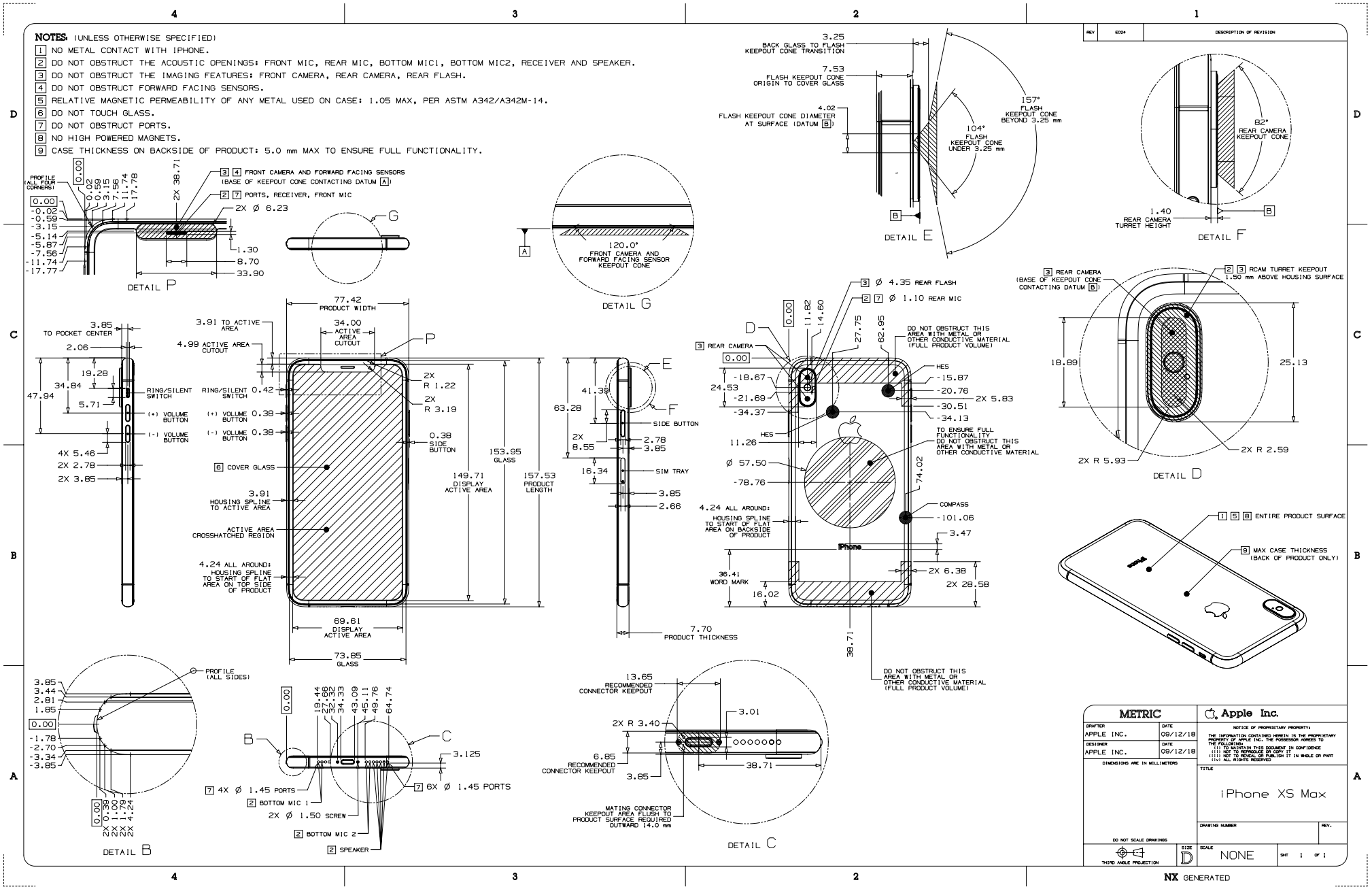

41.14 iPhone XS

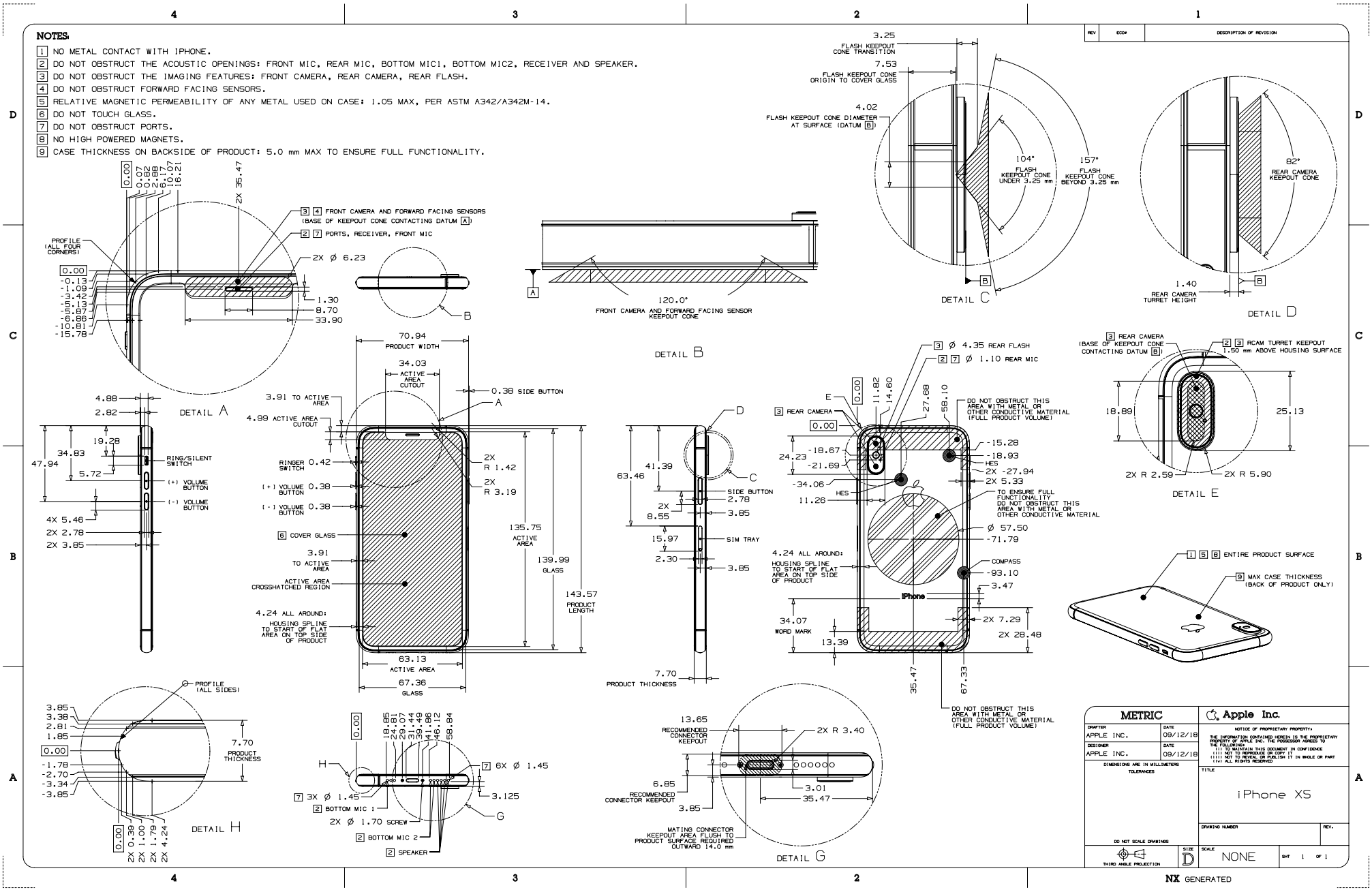

41.15 iPhone XR

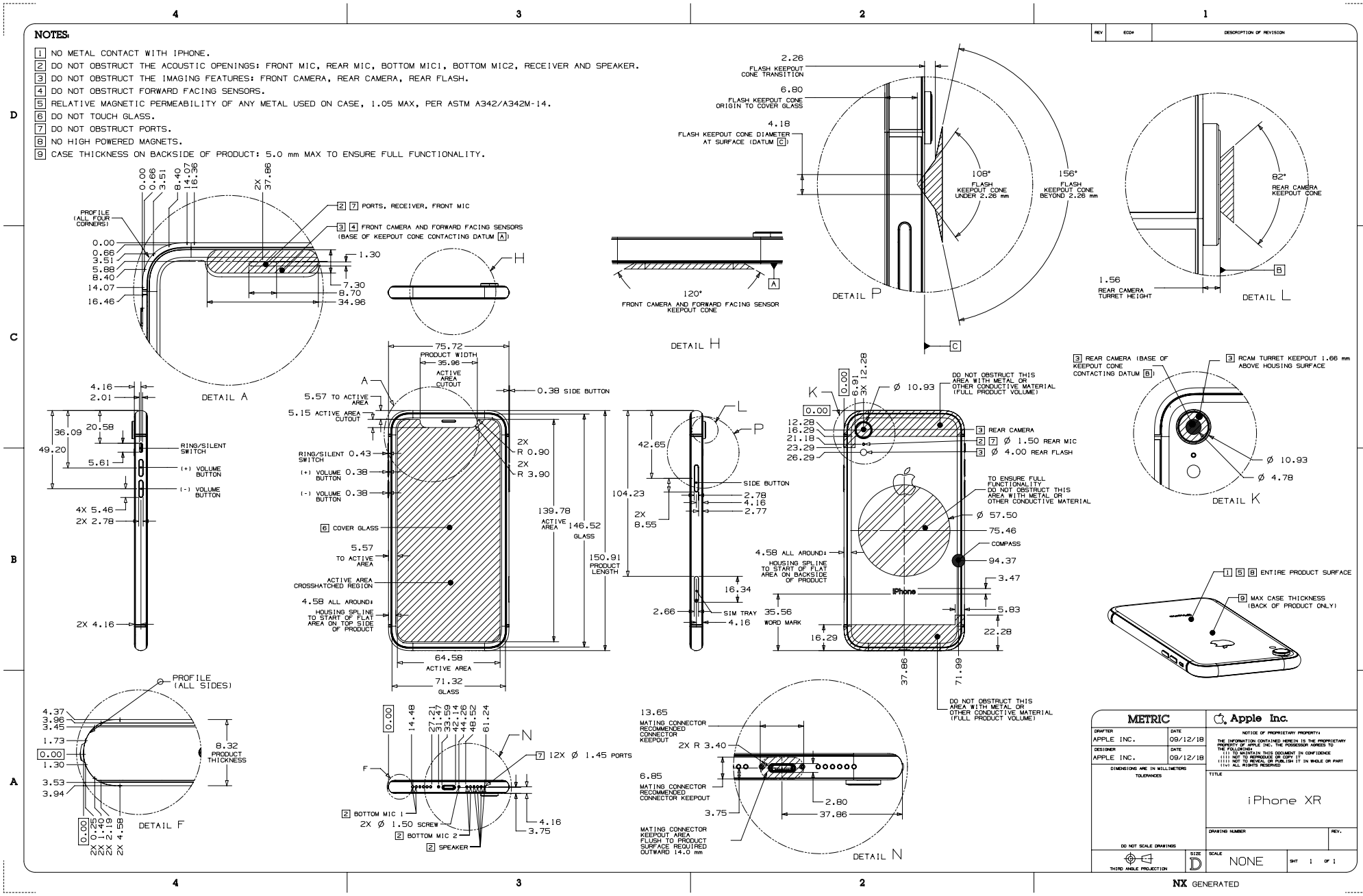

41.16 iPhone X

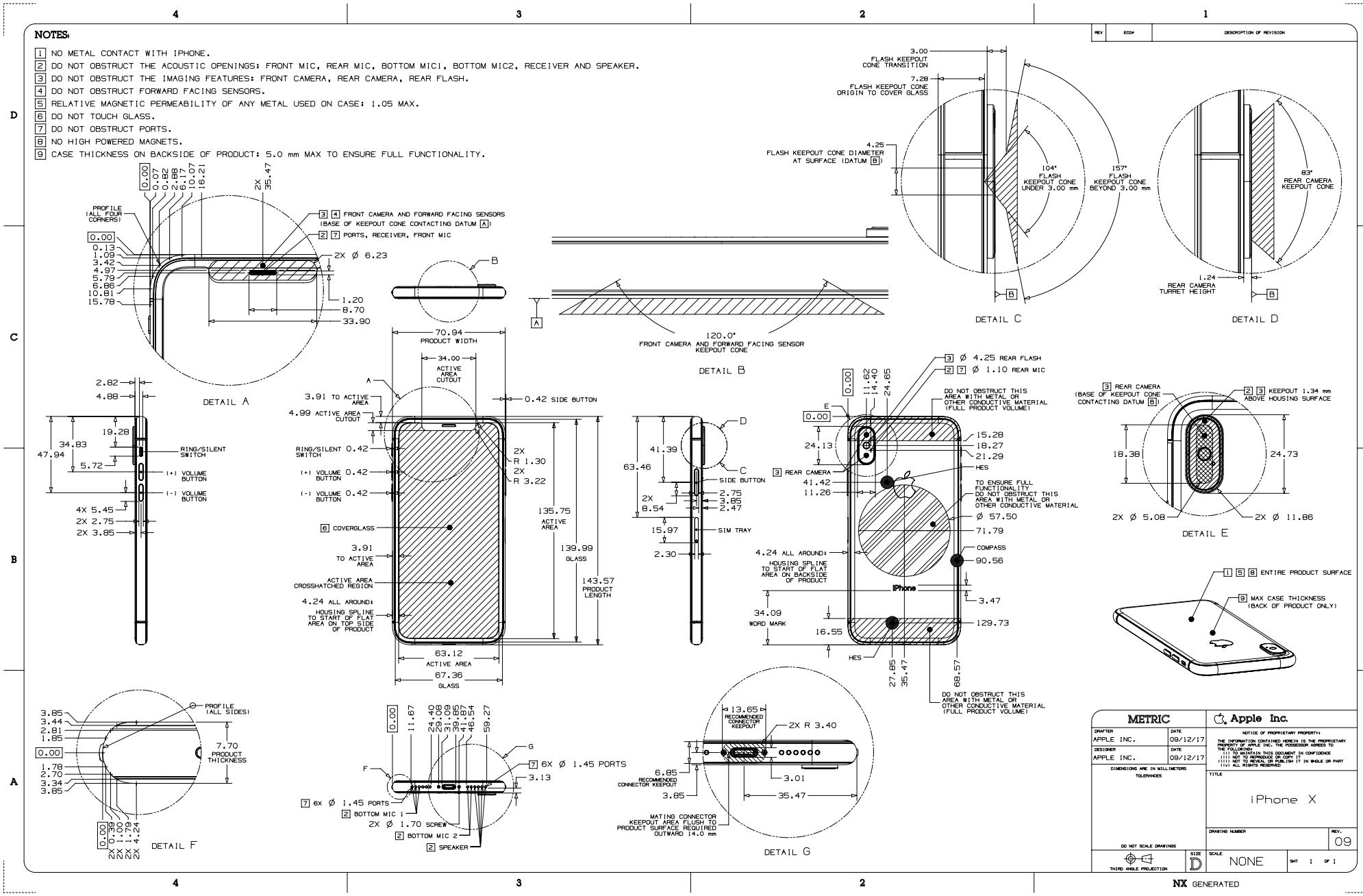

41.17 iPhone 8 Plus

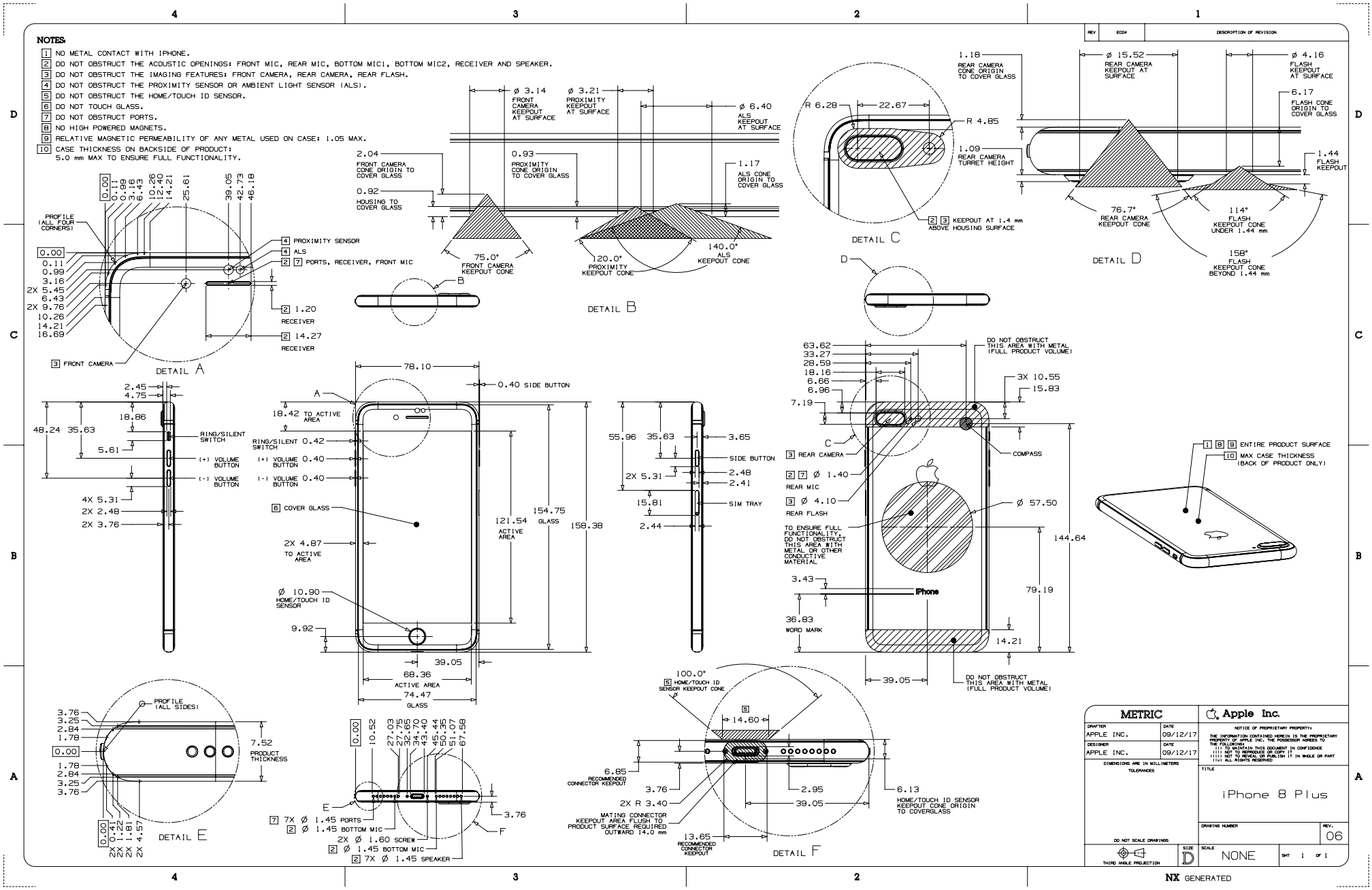

41.18 iPhone 8

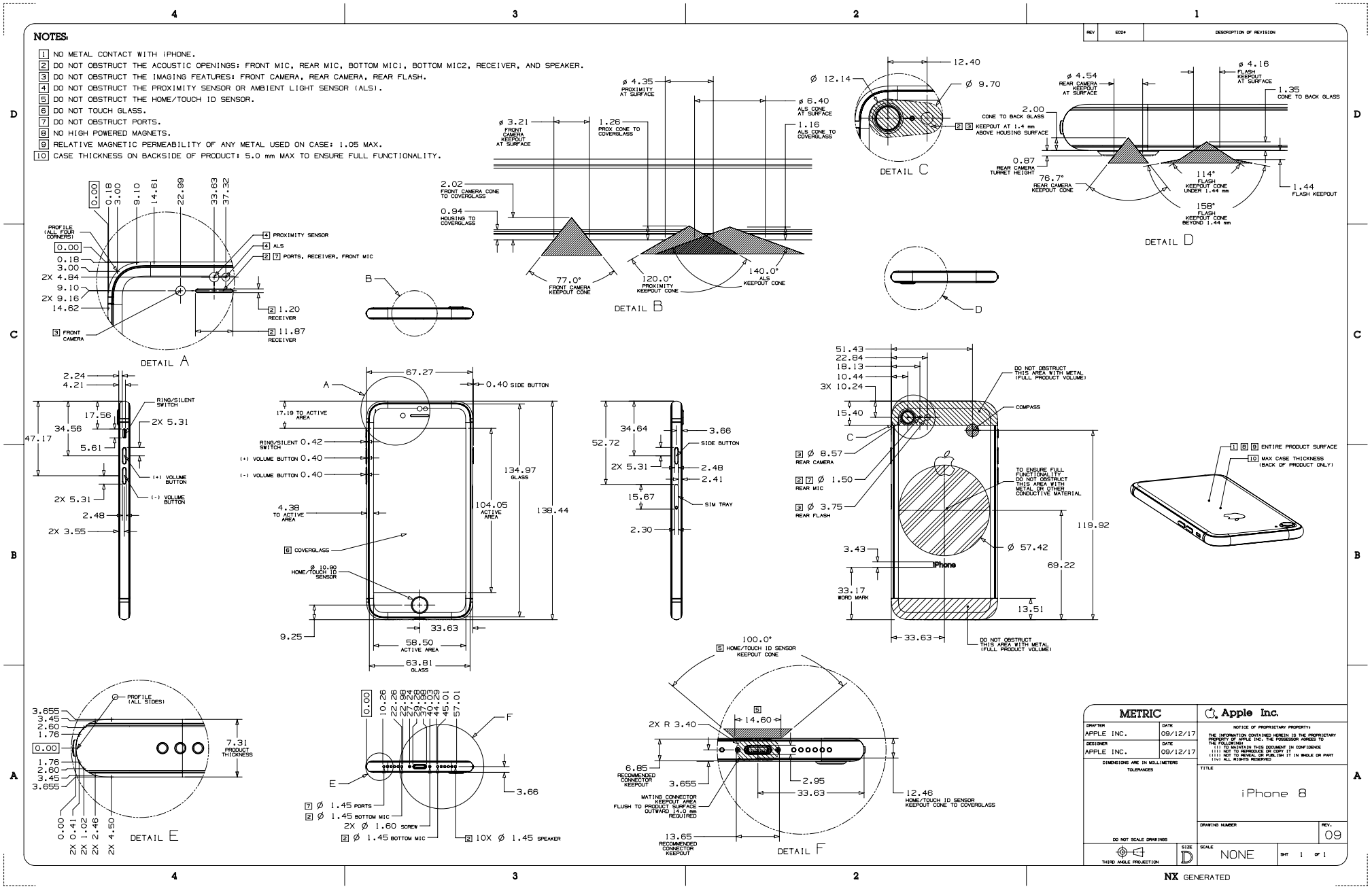

41.19 iPhone 7 Plus

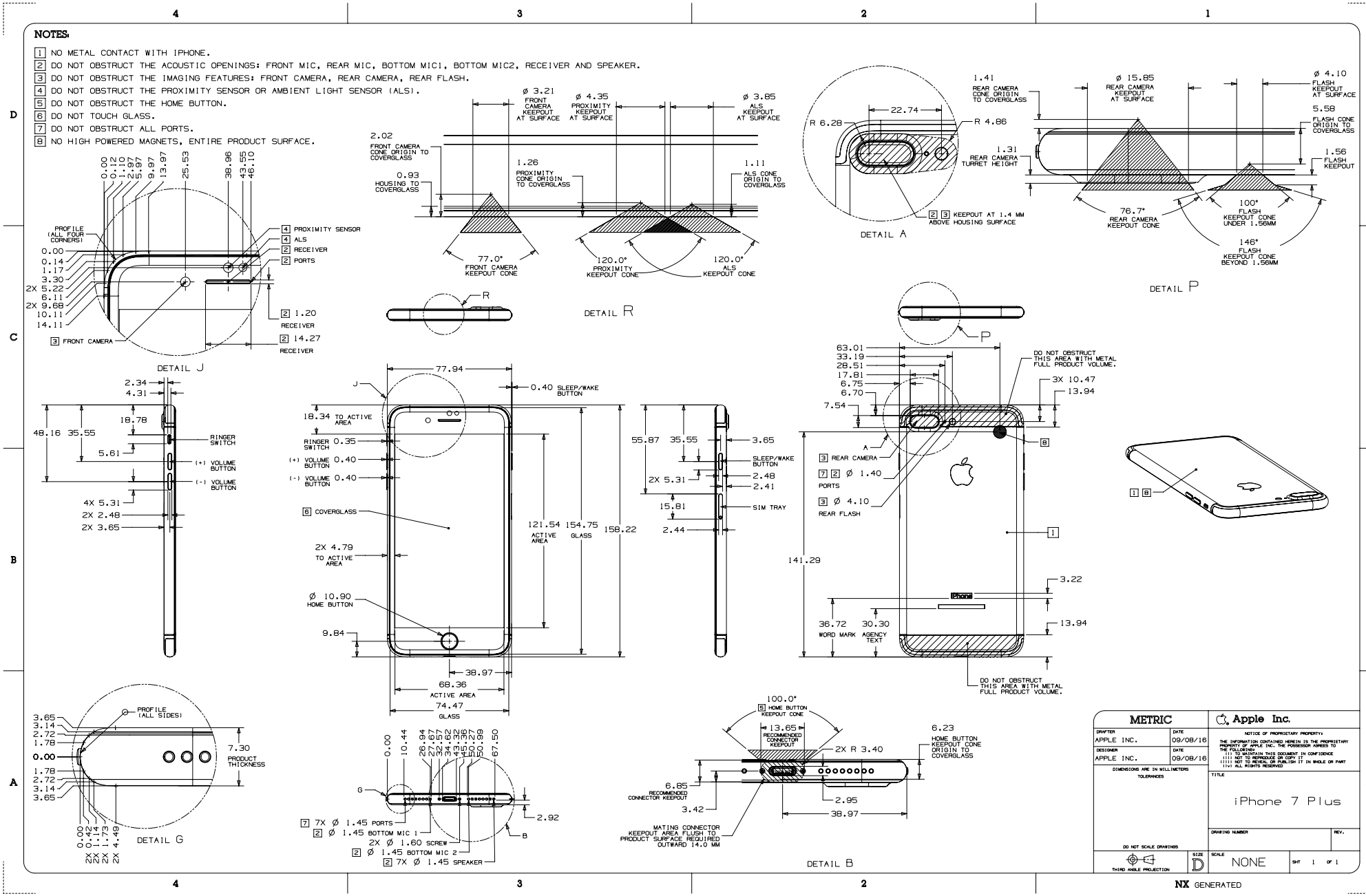

41.20 iPhone 7

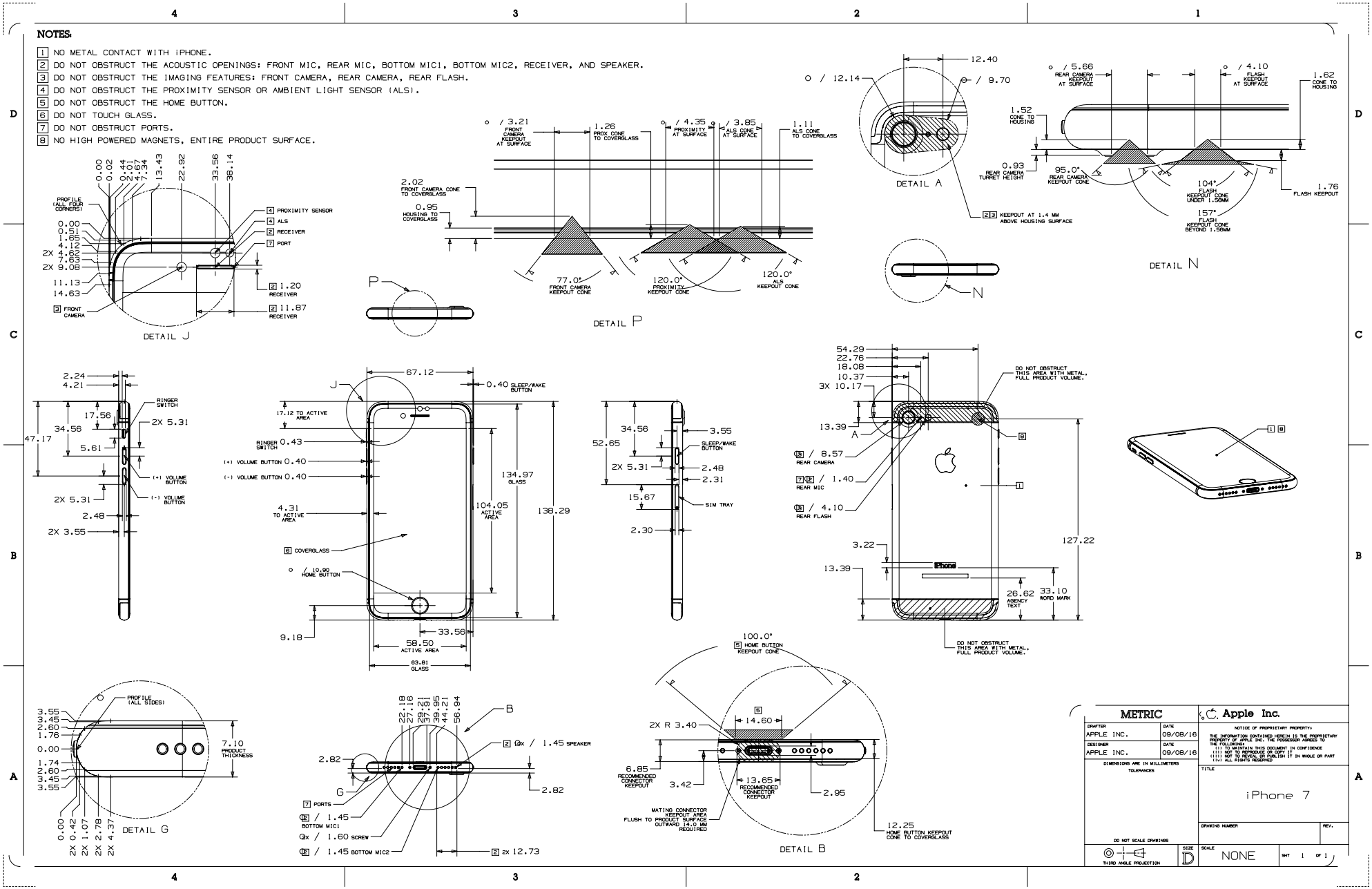

41.21 iPhone 6s Plus

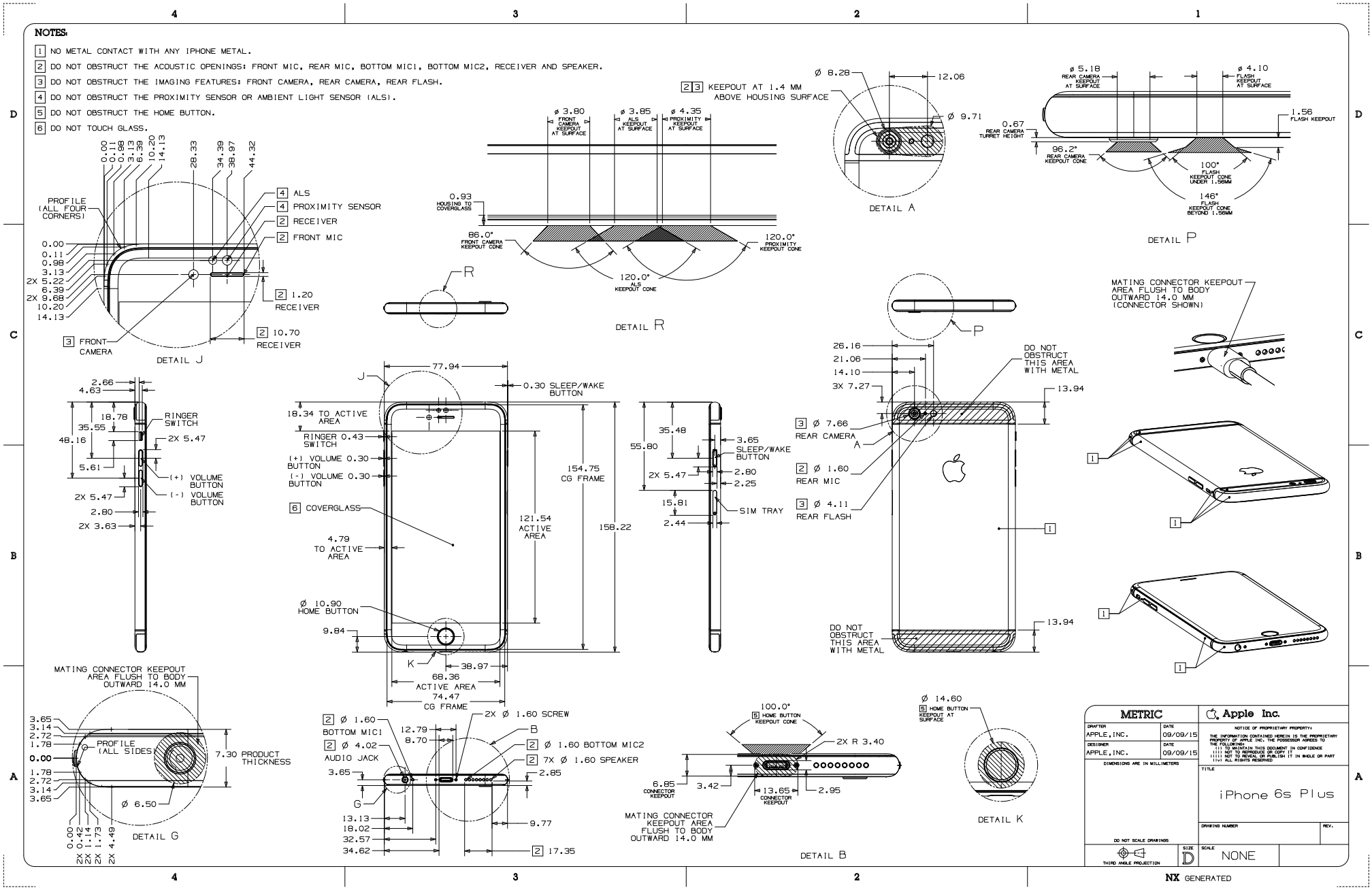

41.22 iPhone 6s

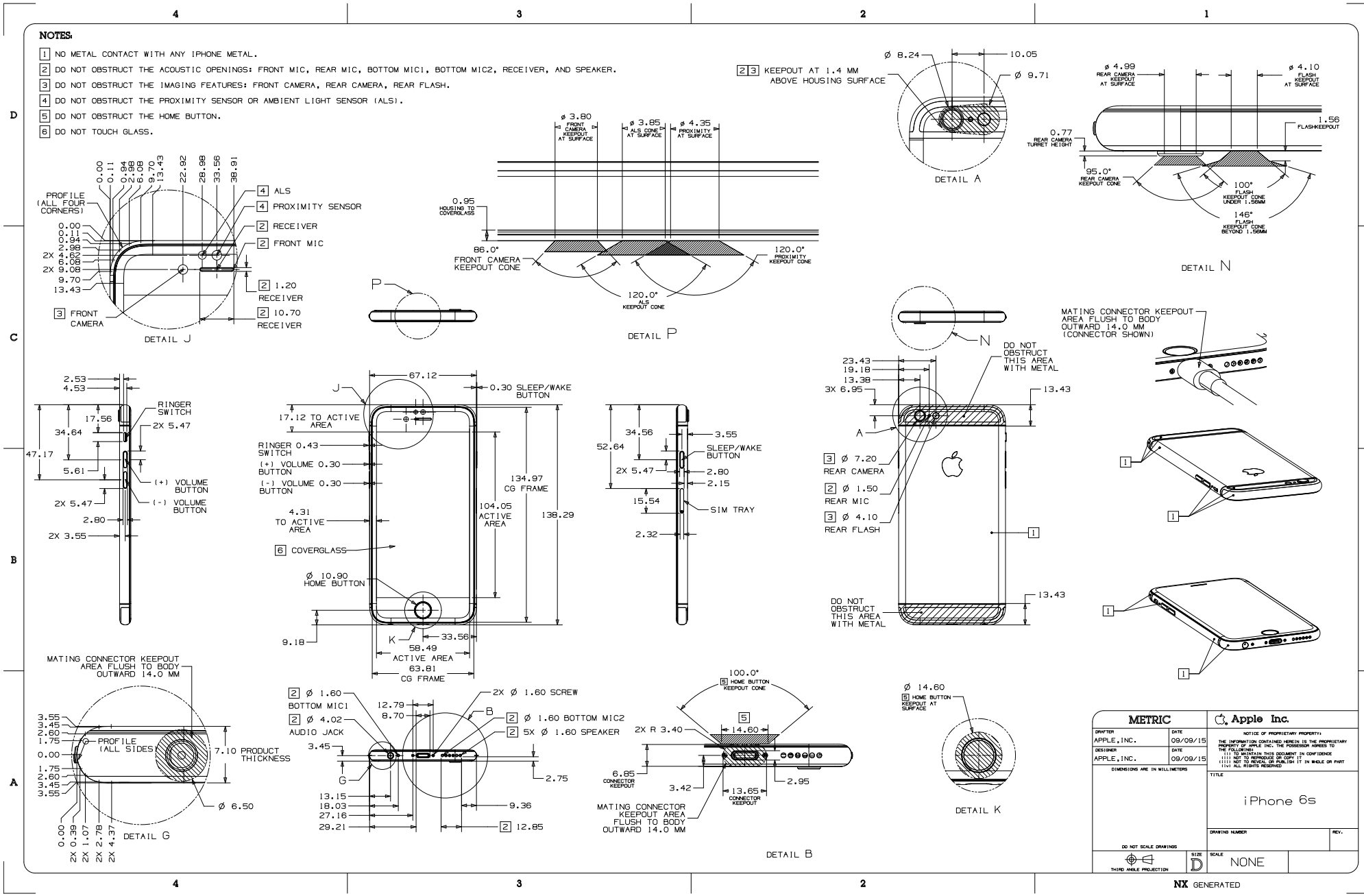

41.23 iPhone 6 Plus

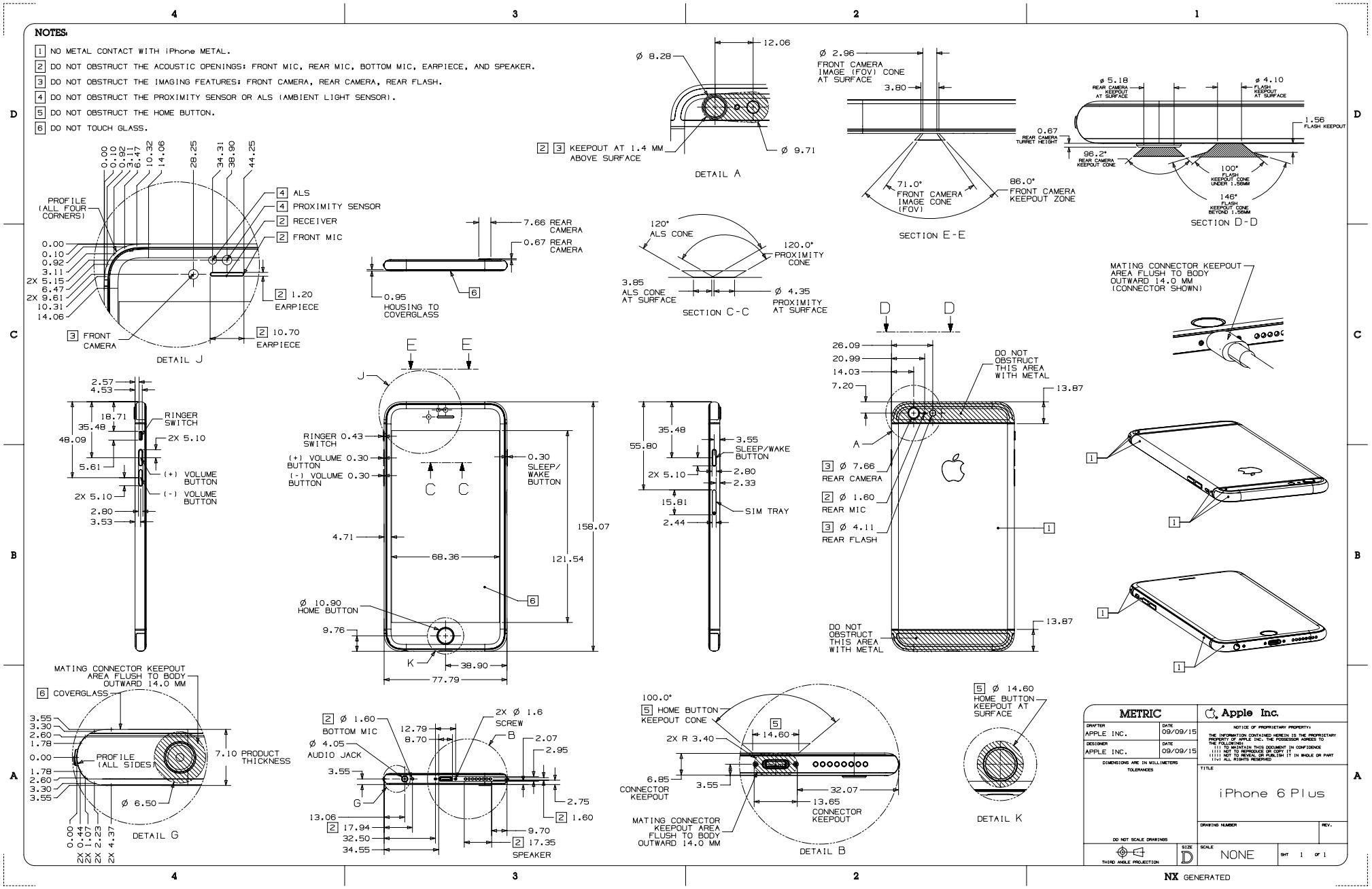

41.24 iPhone 6

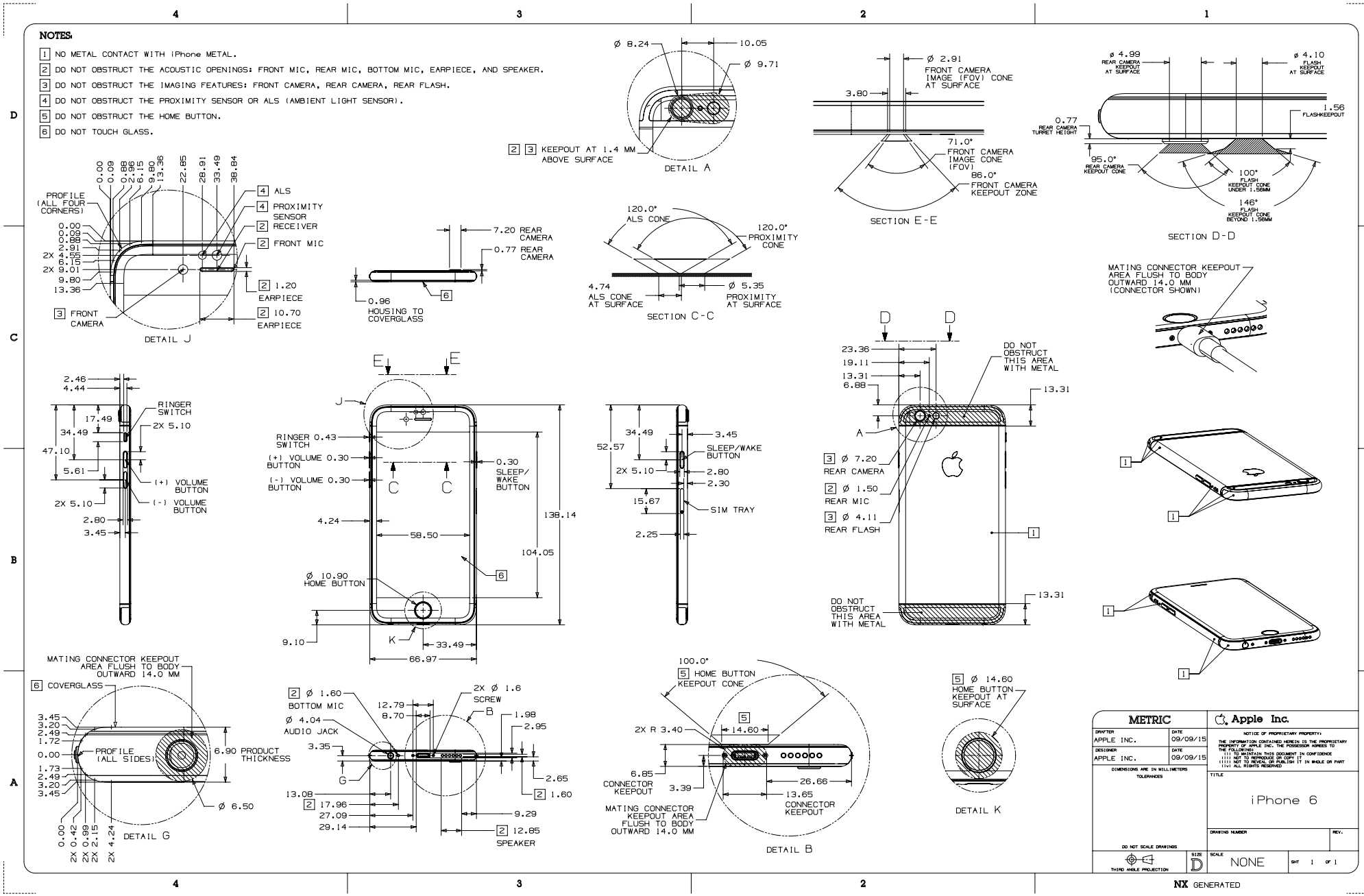

41.25 iPhone 5s & iPhone SE

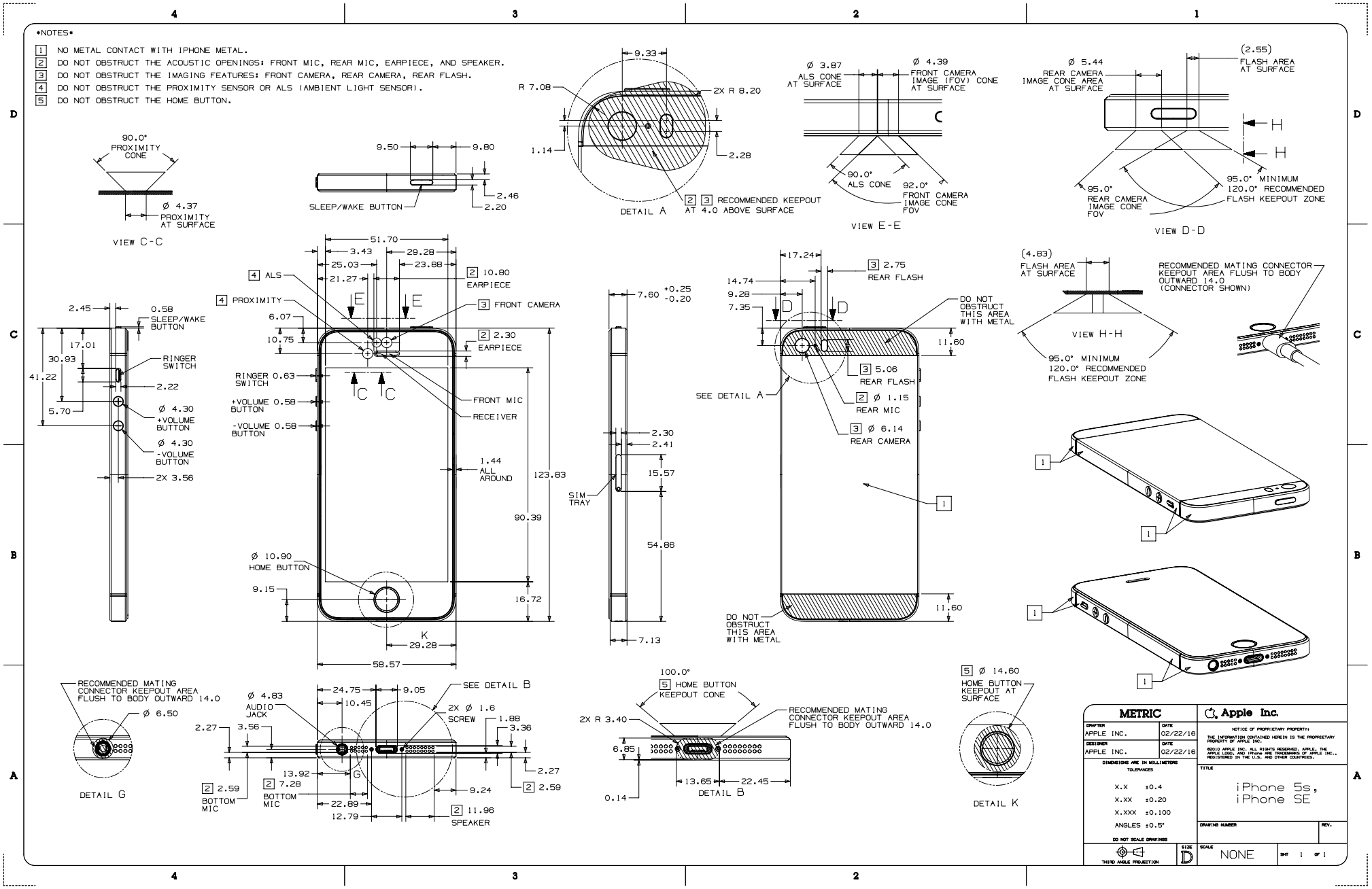

41.26 iPhone 5c

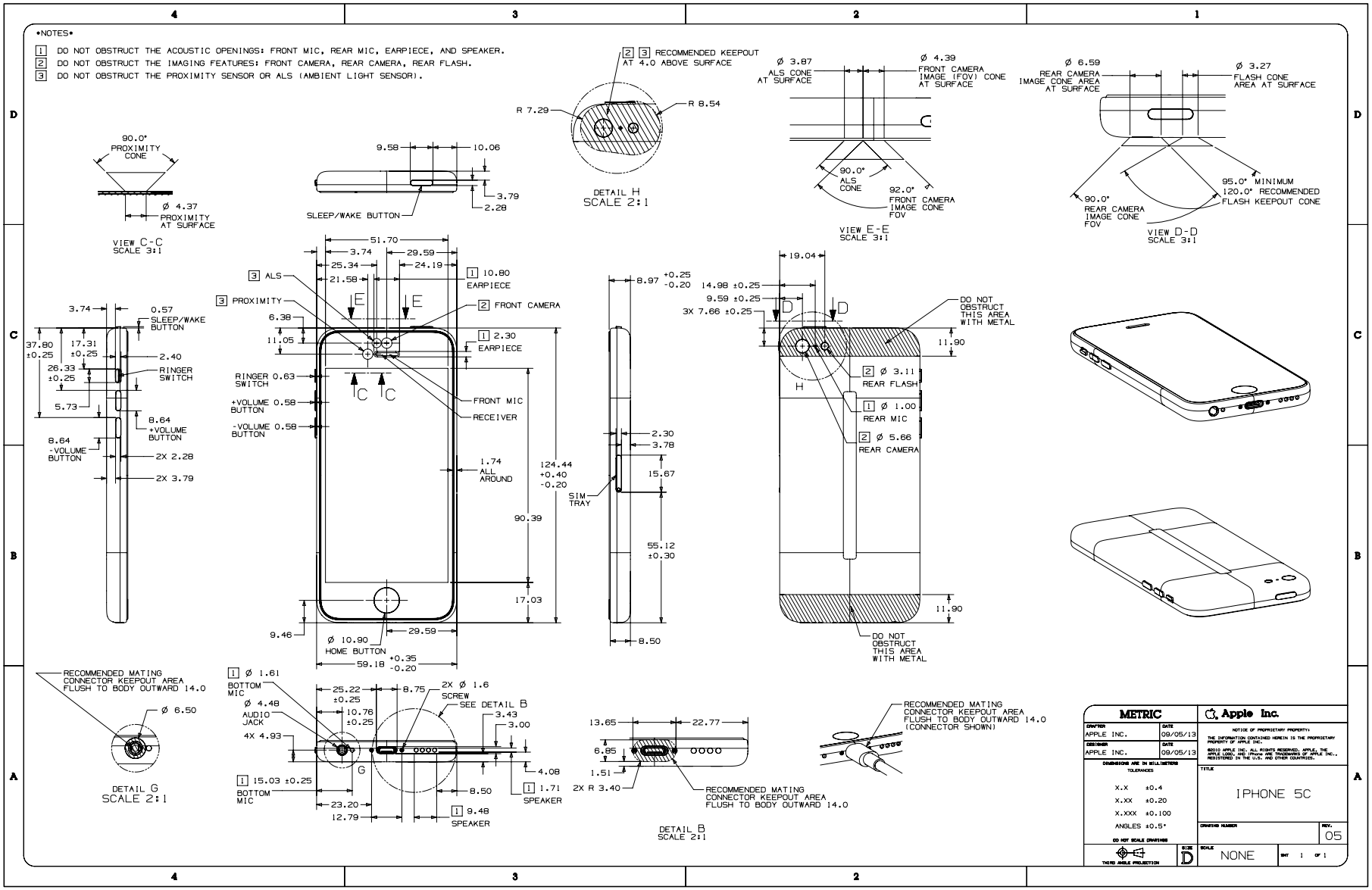

41.27 iPhone 5

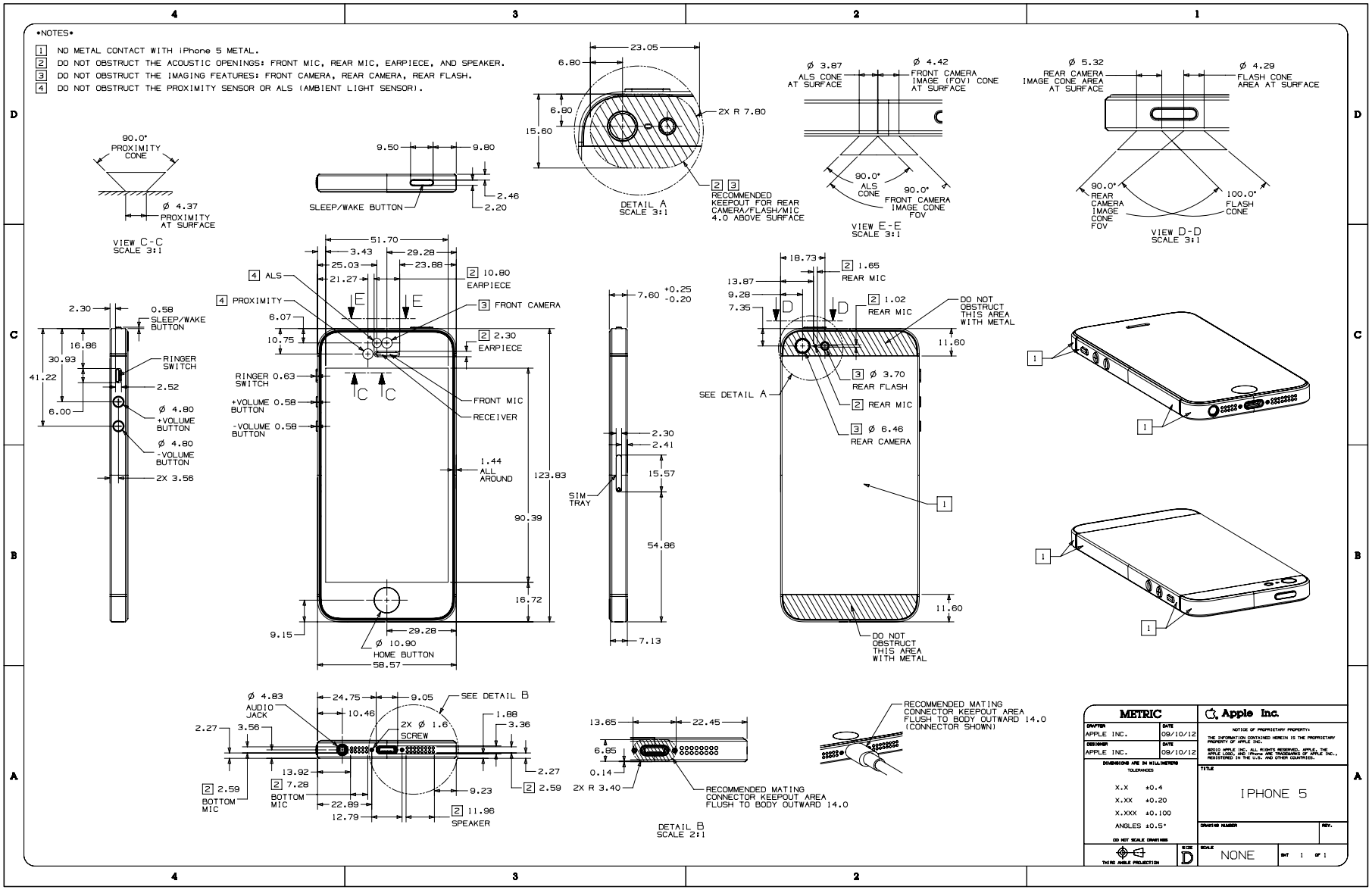

41.28 iPad Pro (12.9-inch) 5th Generation 1 of 5

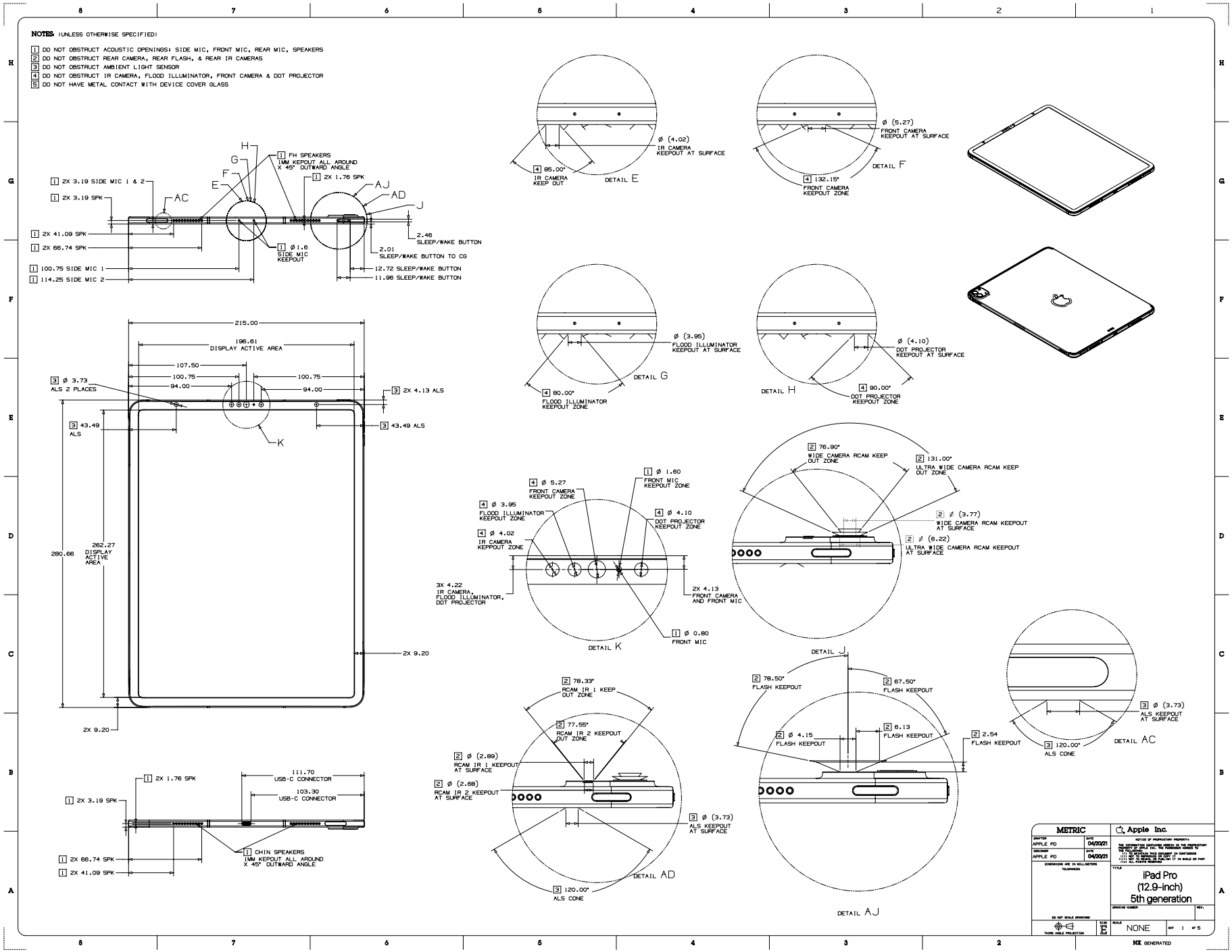

41.29 iPad Pro (12.9-inch) 5th Generation 2 of 5

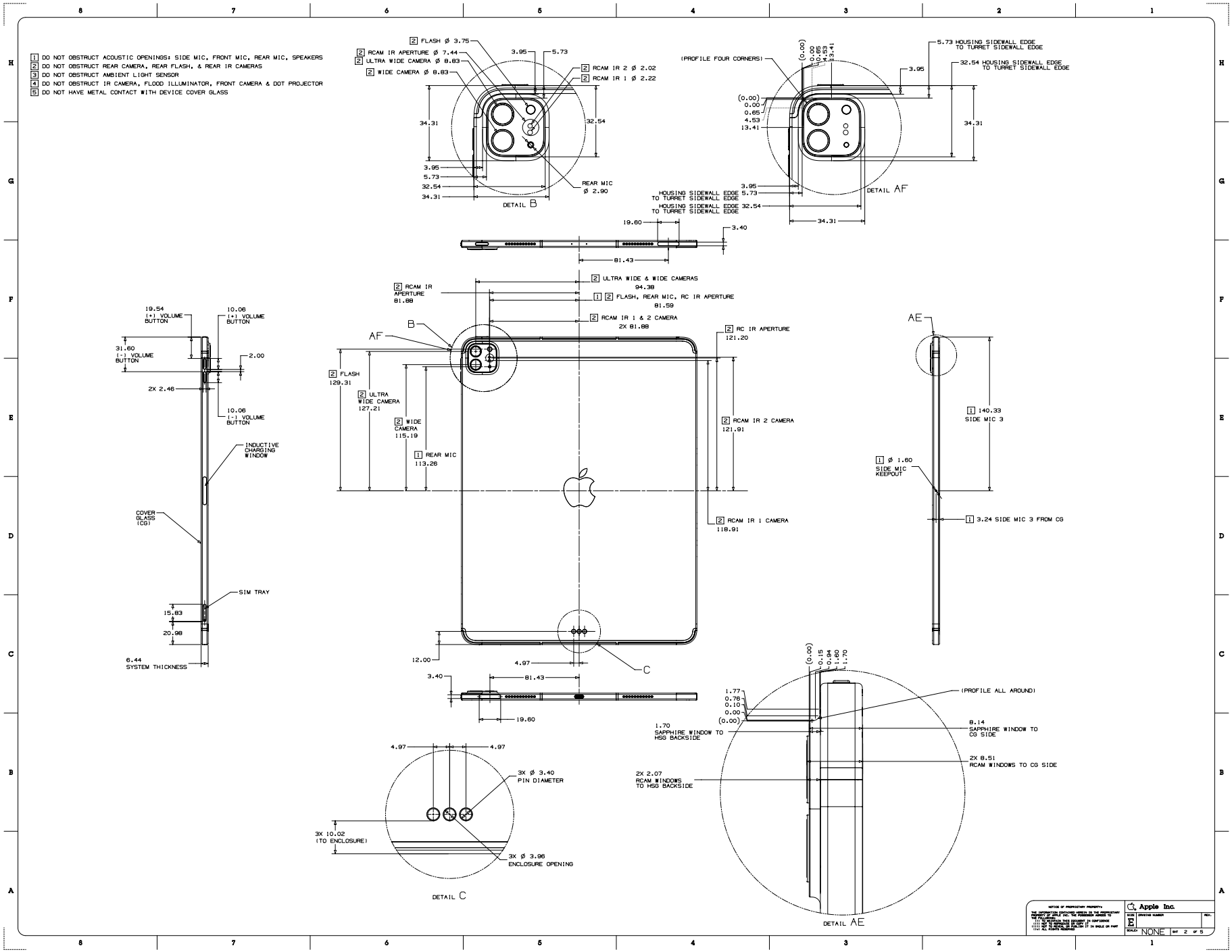

41.30 iPad Pro (12.9-inch) 5th Generation 3 of 5

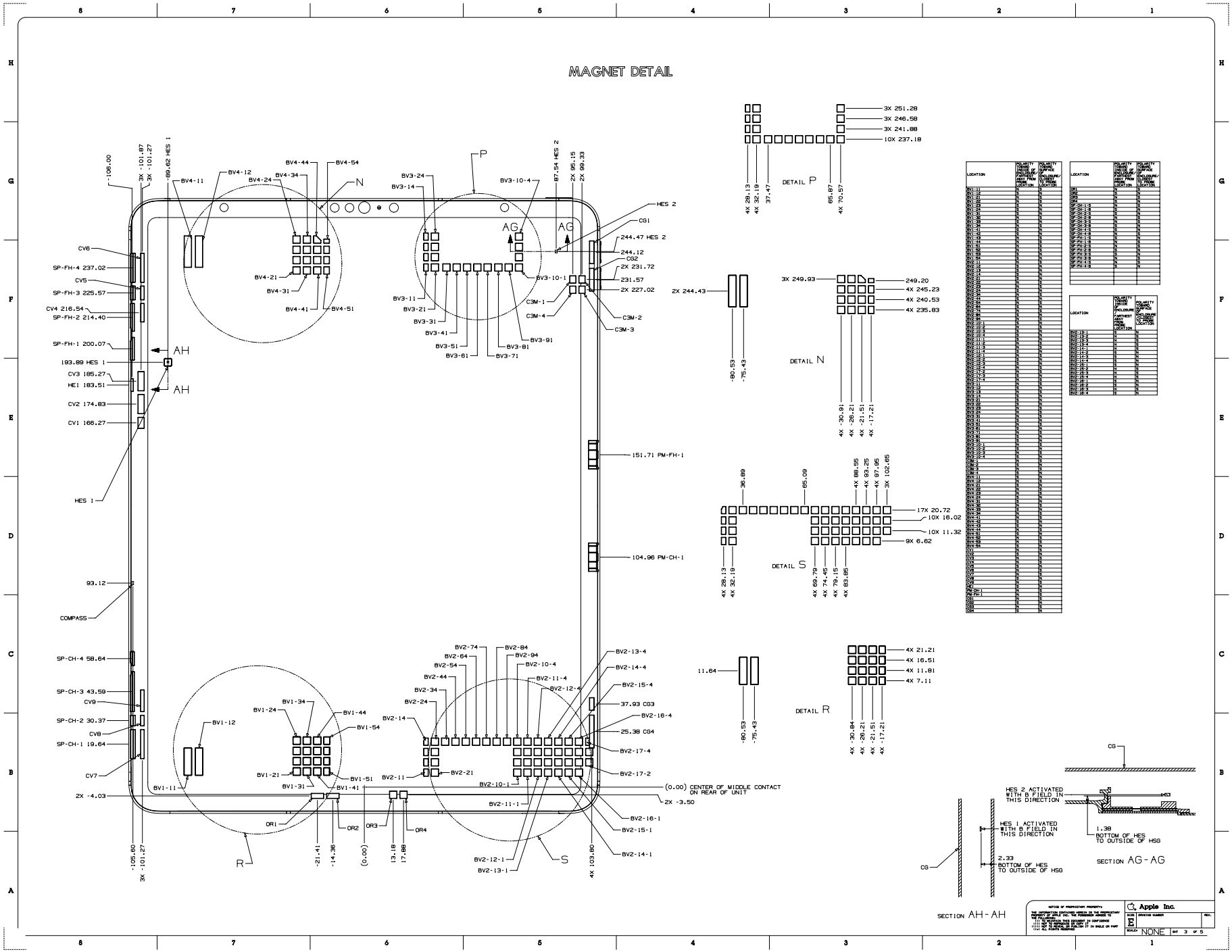

41.31 iPad Pro (12.9-inch) 5th Generation 4 of 5

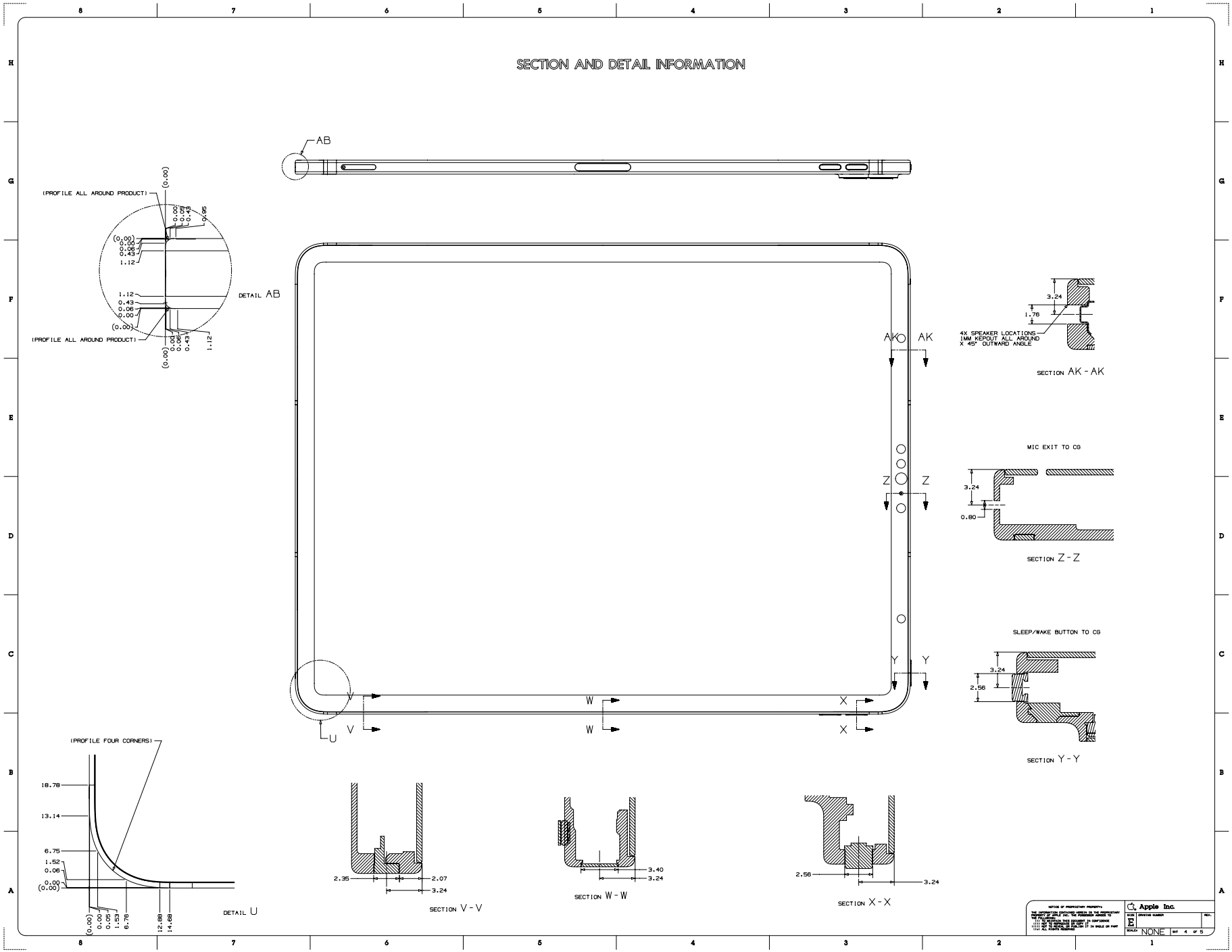

41.32 iPad Pro (12.9-inch) 5th Generation 5 of 5

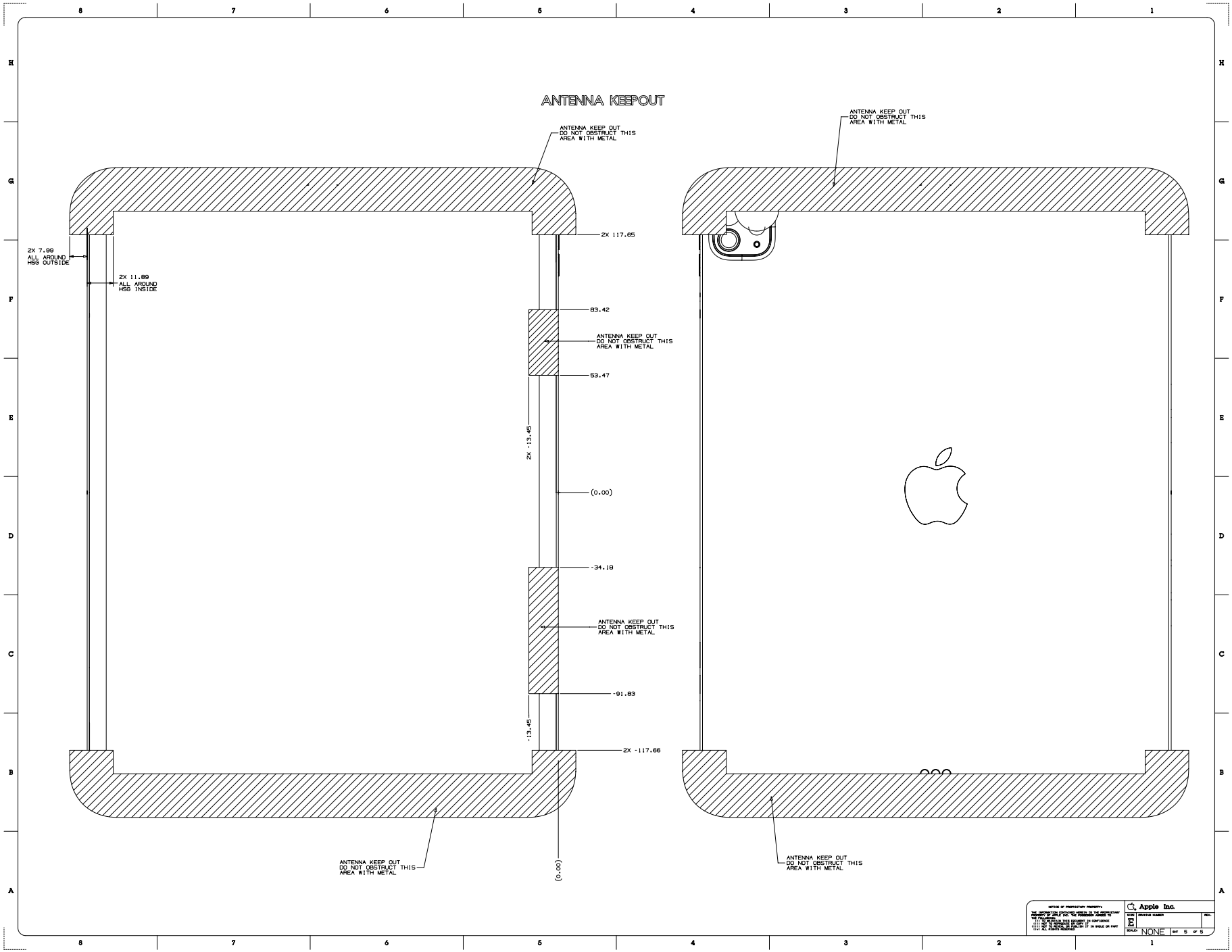

Copyright © 2021 Apple Inc. All Rights Reserved.

41.33 iPad Pro (11-inch) 3rd Generation 1 of 5

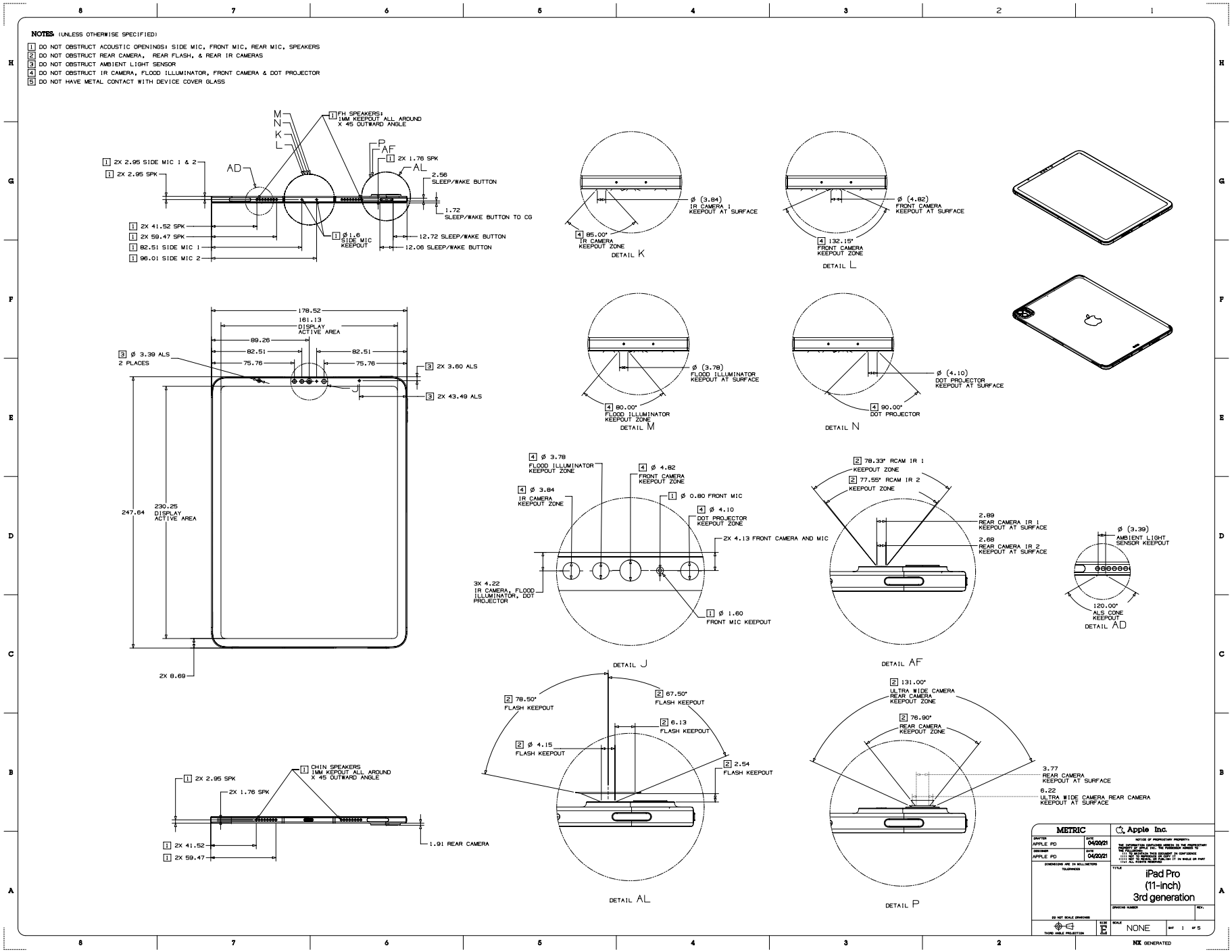

41.34 iPad Pro (11-inch) 3rd Generation 2 of 5

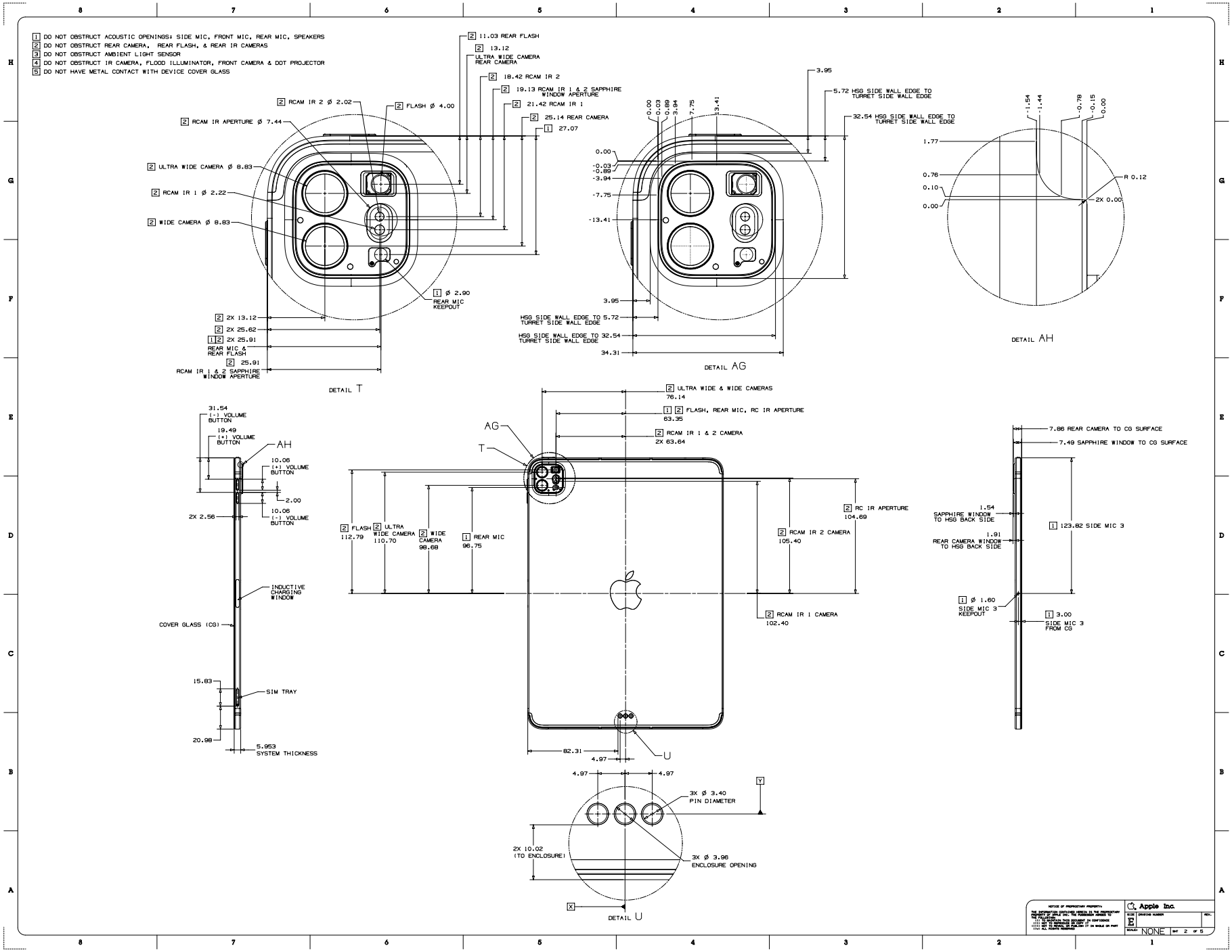

41.35 iPad Pro (11-inch) 3rd Generation 3 of 5

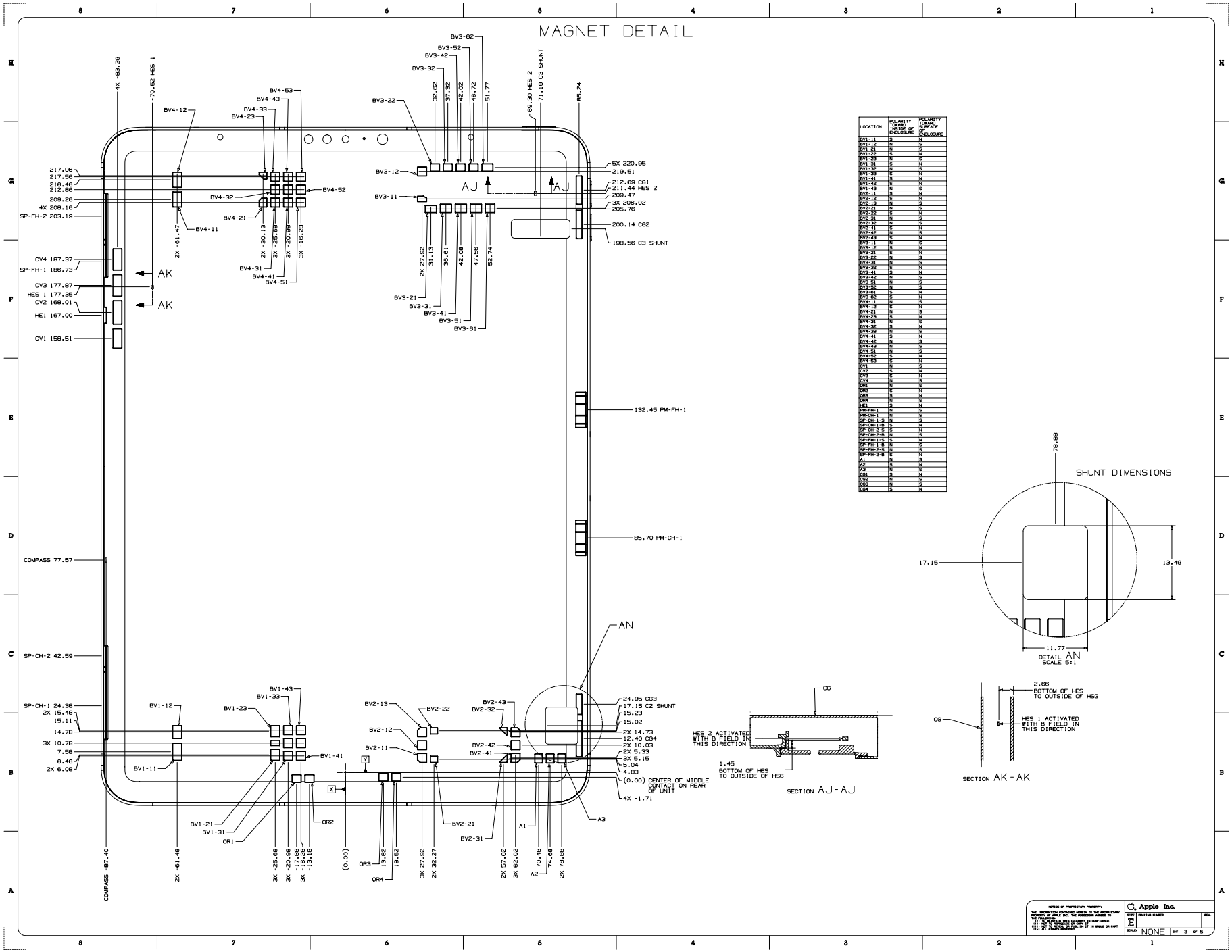

41.36 iPad Pro (11-inch) 3rd Generation 4 of 5

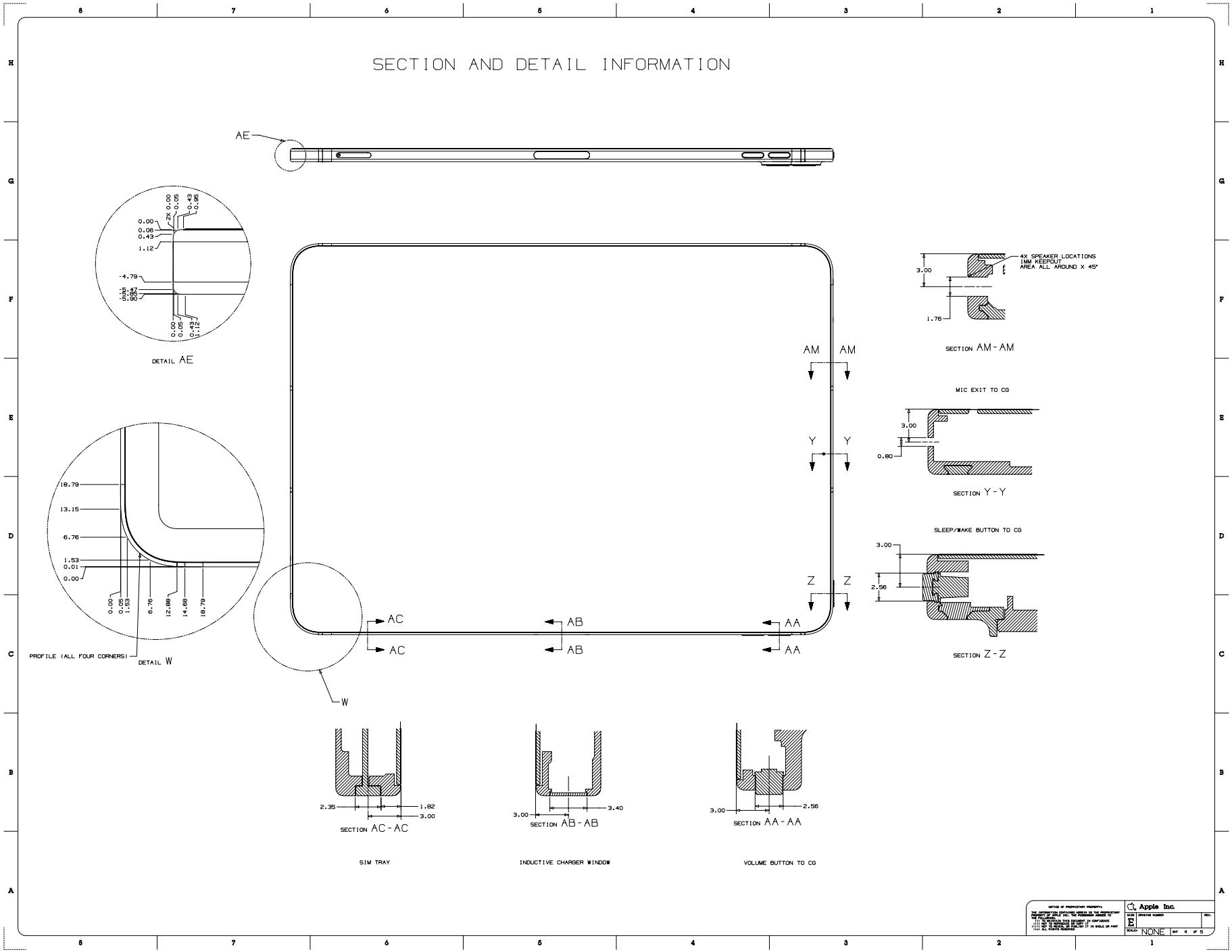

41.37 iPad Pro (11-inch) 3rd Generation 5 of 5

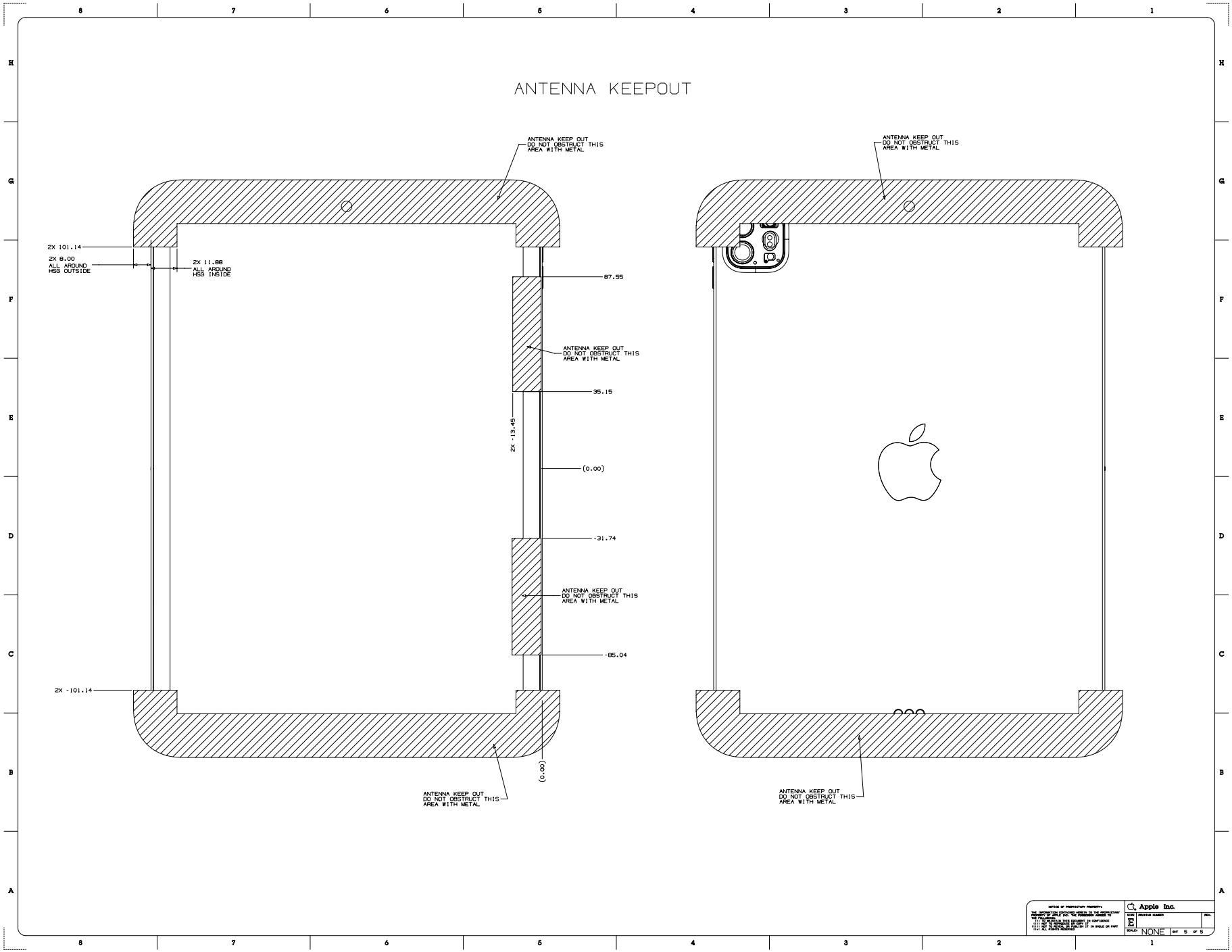

41.38 iPad Air (4th generation) 1 of 5

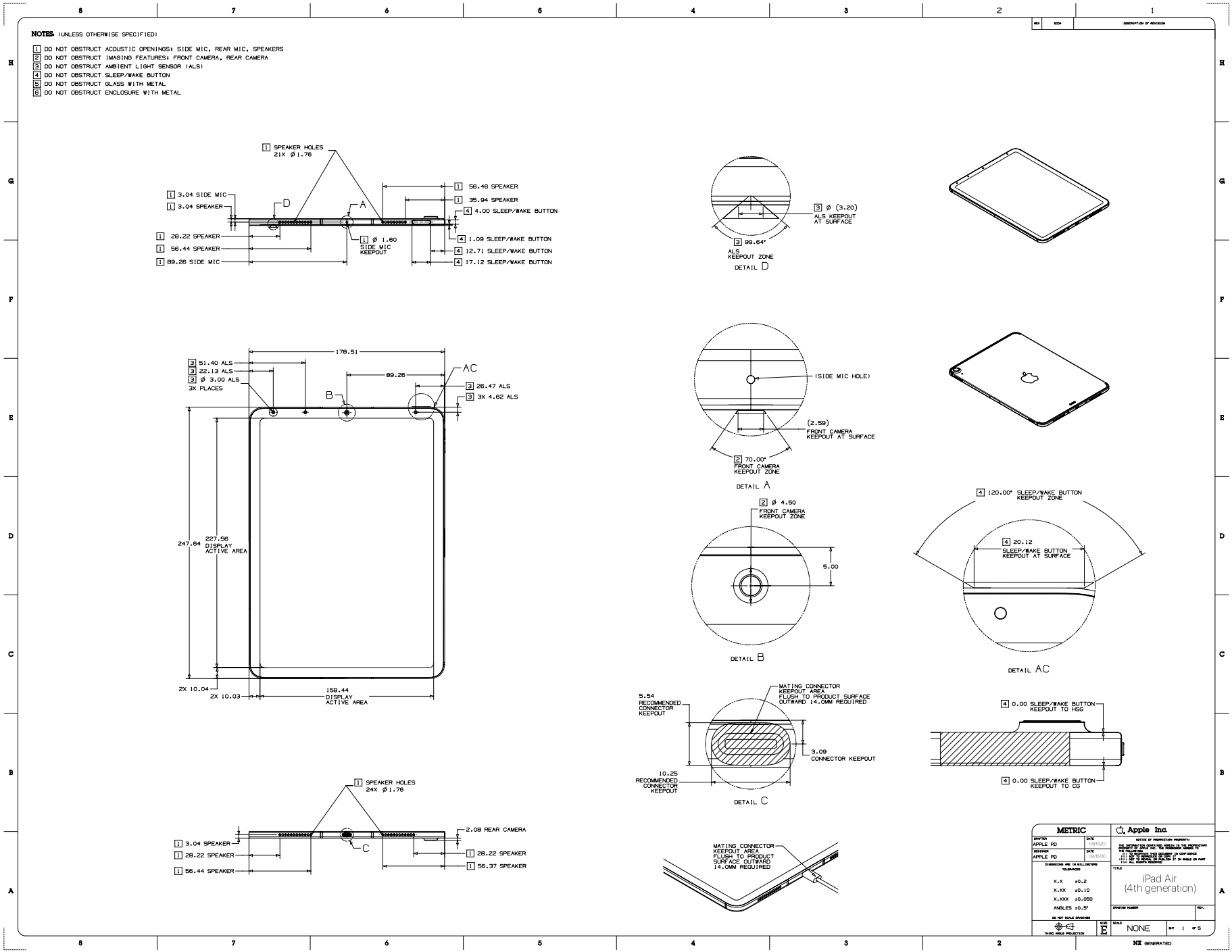

41.39 iPad Air (4th generation) 2 of 5

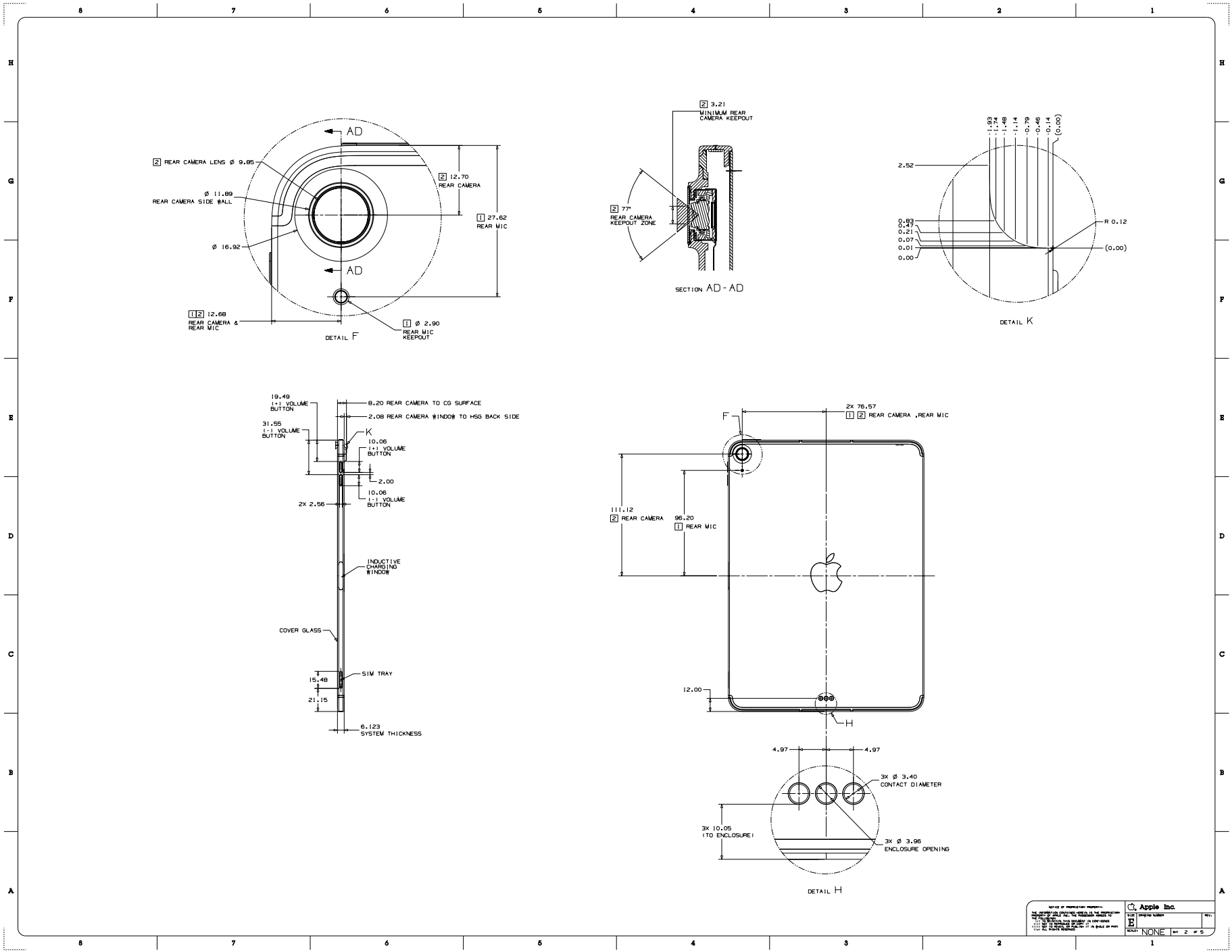

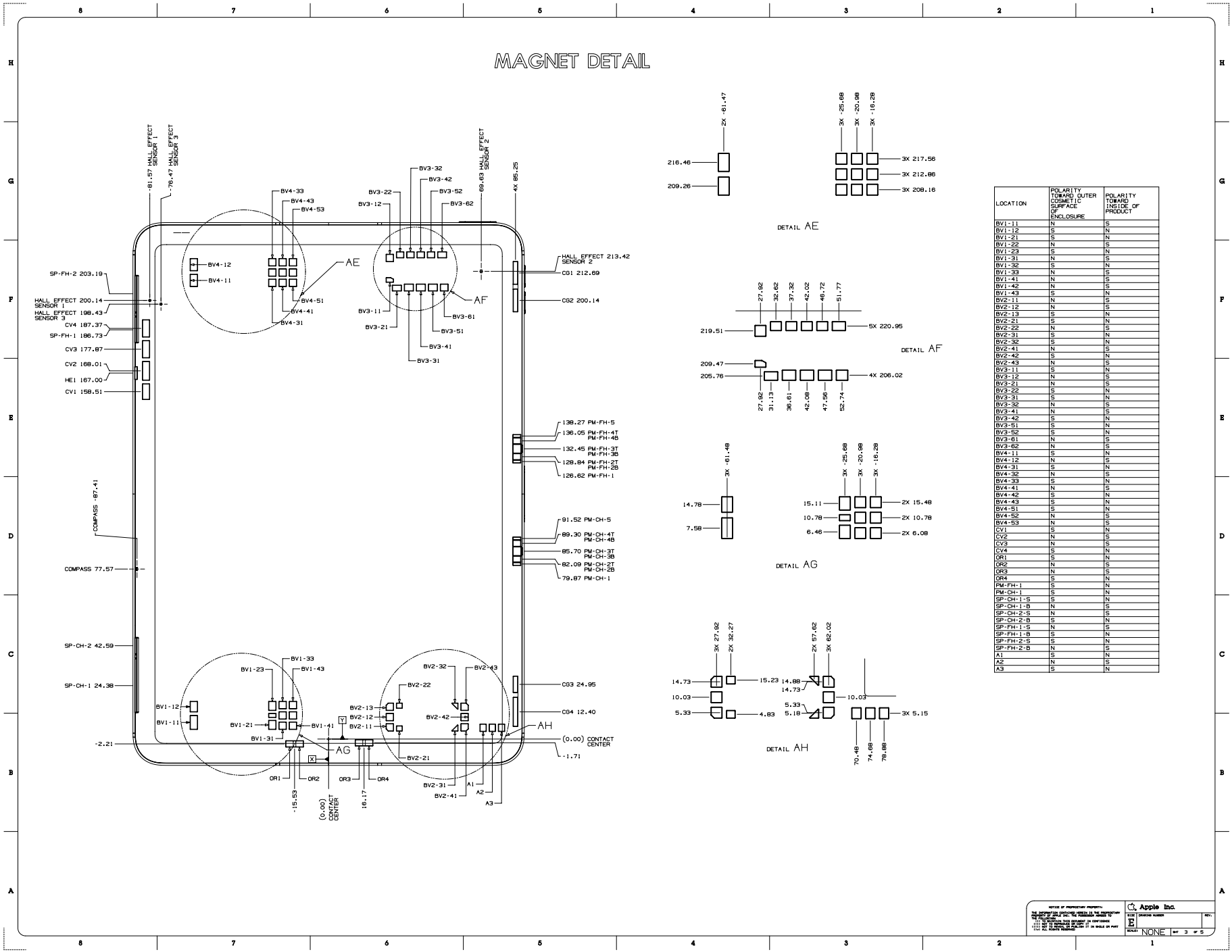

LOCATION	POLARITY TOWARD OUTER COSMETIC SURFACE OF ENCLOSURE	POLARITY TOWARD INSIDE OF PRODUCT
BV1-11	N	S
BV1-12	S	N
BV1-21	S	N
BV1-22	N	S
BV1-23	S	N
BV1-31	N	S
BV1-32	S	N
BV1-33	N	S
BV1-41	N	S
BV1-42	N	S
BV1-43	S	N
BV2-11	N	S
BV2-12	N	S
BV2-13	S	N
BV2-21	S	N
BV2-22	N	S
BV2-31	S	N
BV2-32	S	N
BV2-41	N	S
BV2-42	S	N
BV2-43	N	S
BV3-11	S	N
BV3-12	N	S
BV3-21	N	S
BV3-22	S	N
BV3-31	S	N
BV3-32	N	S
BV3-41	N	S
BV3-42	S	N
BV3-51	S	N
BV3-52	S	N
BV3-61	N	S
BV3-62	N	S
BV4-11	S	N
BV4-12	N	S
BV4-31	S	N
BV4-32	N	S
BV4-33	S	N
BV4-41	N	S
BV4-42	S	N
BV4-43	S	N
BV4-51	S	N
BV4-52	N	S
BV4-53	N	S
CV1	S	N
CV2	N	S
CV3	N	S
CV4	S	N
OR1	S	N
OR2	N	S
OR3	N	S
OR4	S	N
PM-FH-1	S	N
PM-CH-1	S	N
SP-CH-1-S	S	N
SP-CH-1-B	N	S
SP-CH-2-S	N	S
SP-CH-2-B	S	N
SP-FH-1-S	N	S
SP-FH-1-B	S	N
SP-FH-2-S	S	N
SP-FH-2-B	N	S
A1	S	N
A2	N	S
A3	S	N

41.41 iPad Air (4th generation) 4 of 5

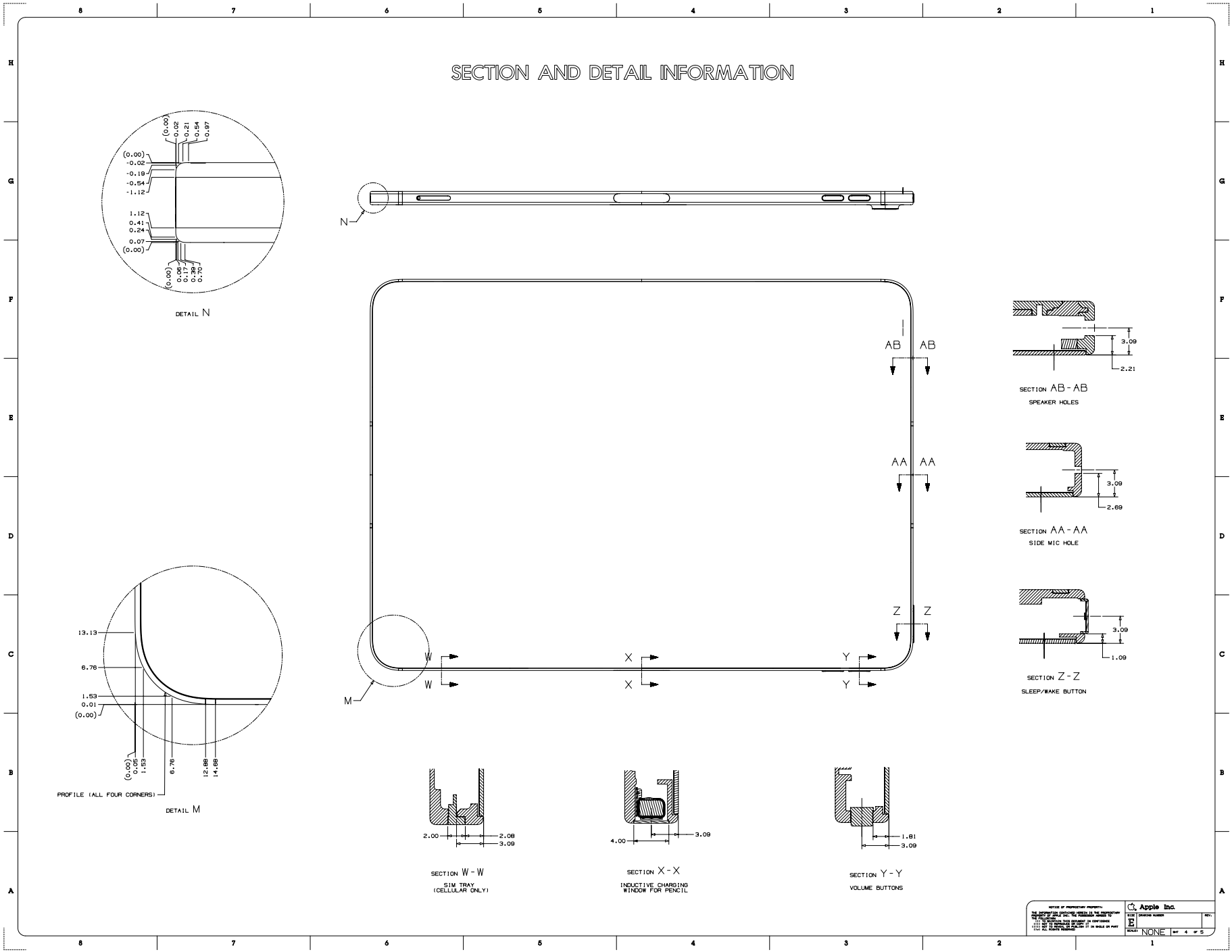

41.42 iPad Air (4th generation) 5 of 5

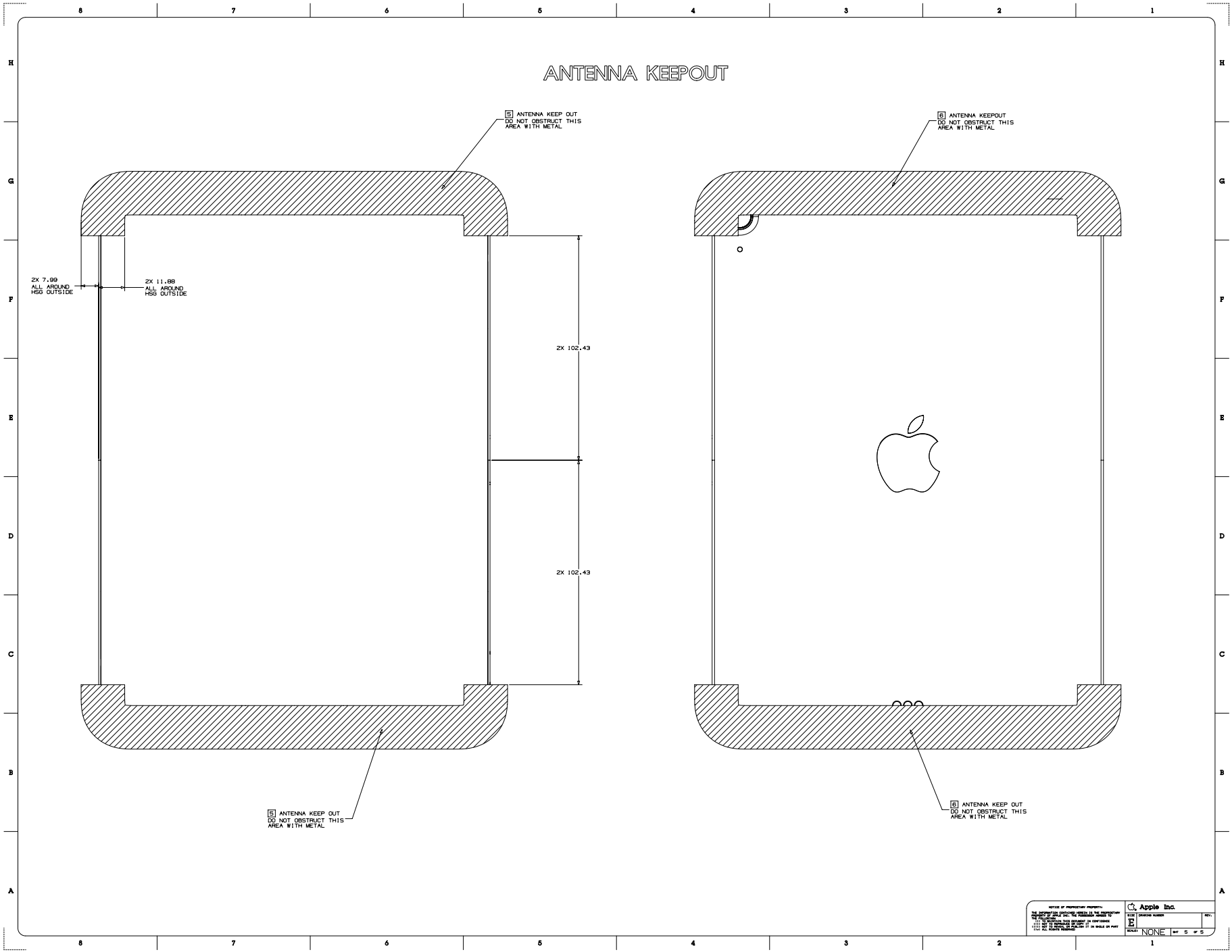

Copyright © 2021 Apple Inc. All Rights Reserved.

41.43 iPad Pro (12.9-inch) 4th Generation 1 of 5

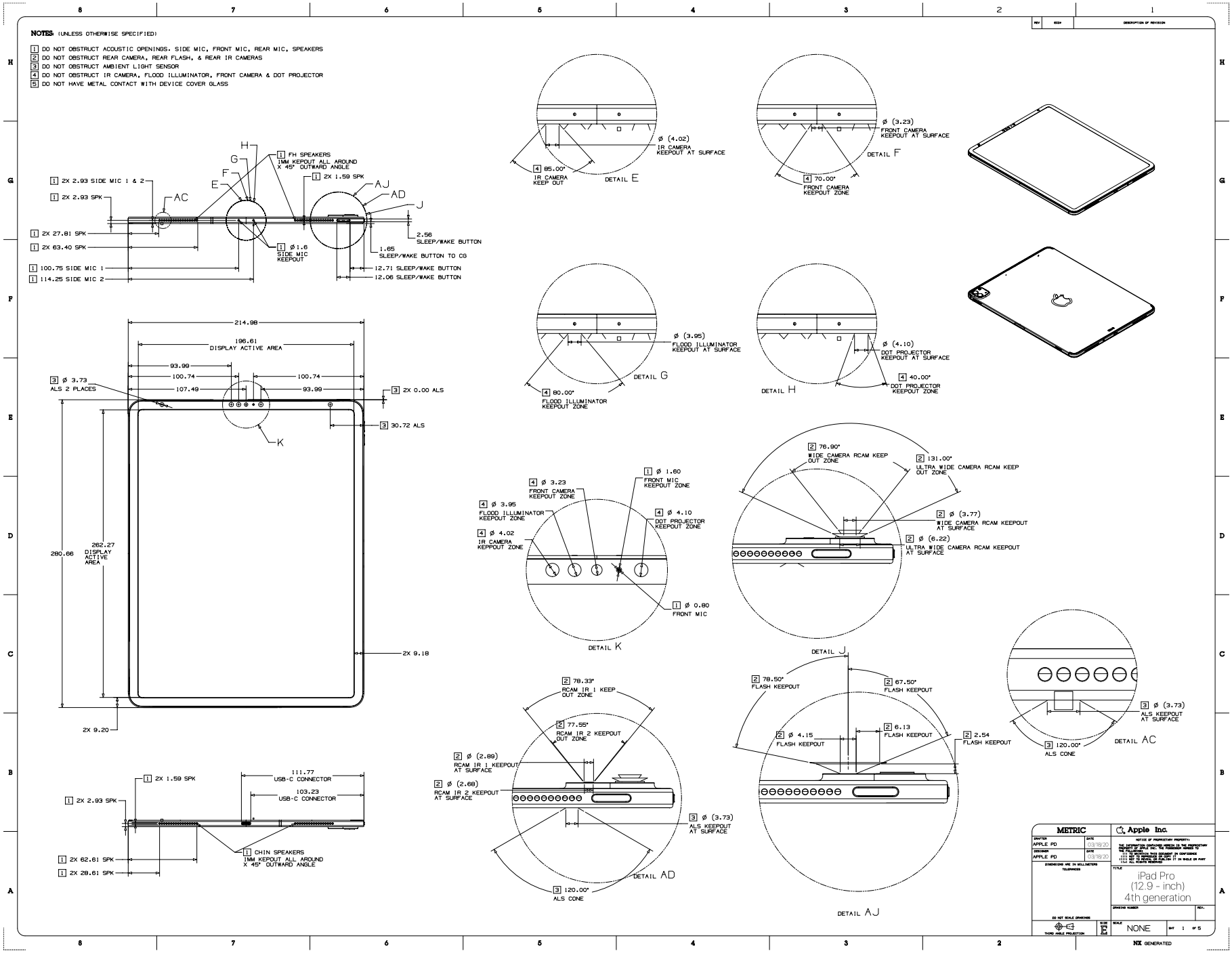

41.44 iPad Pro (12.9-inch) 4th Generation 2 of 5

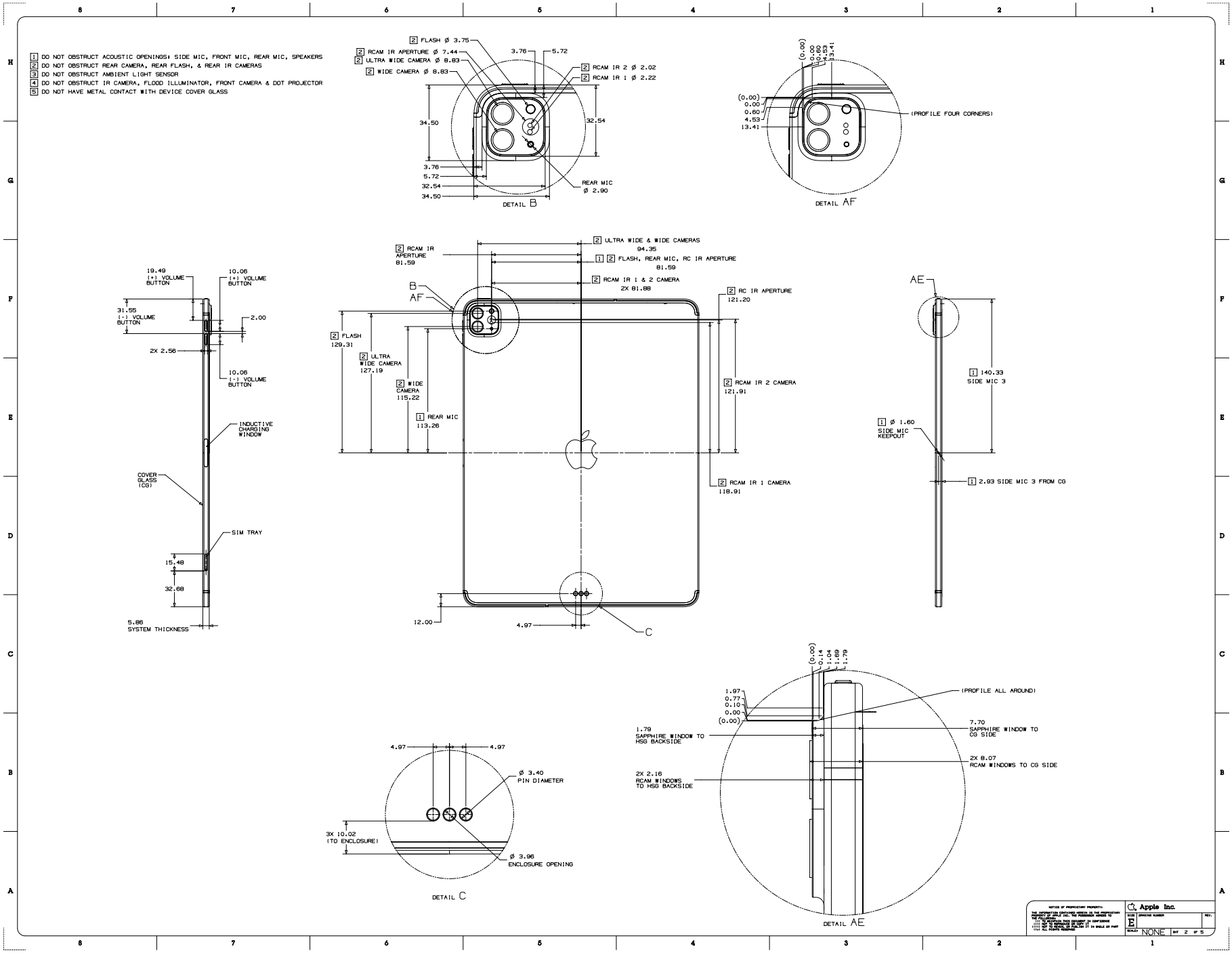

41.45 iPad Pro (12.9-inch) 4th Generation 3 of 5

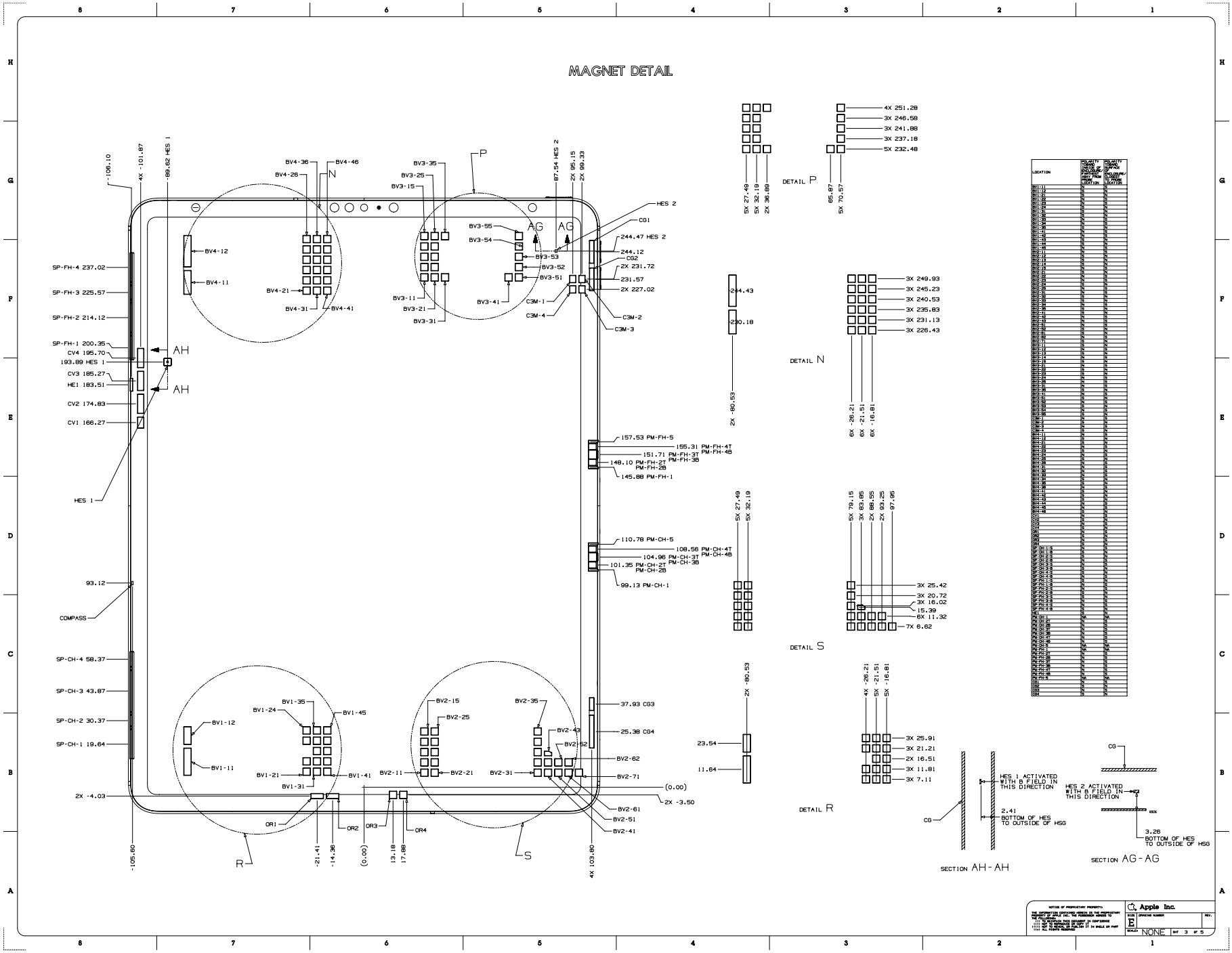

41.46 iPad Pro (12.9-inch) 4th Generation 4 of 5

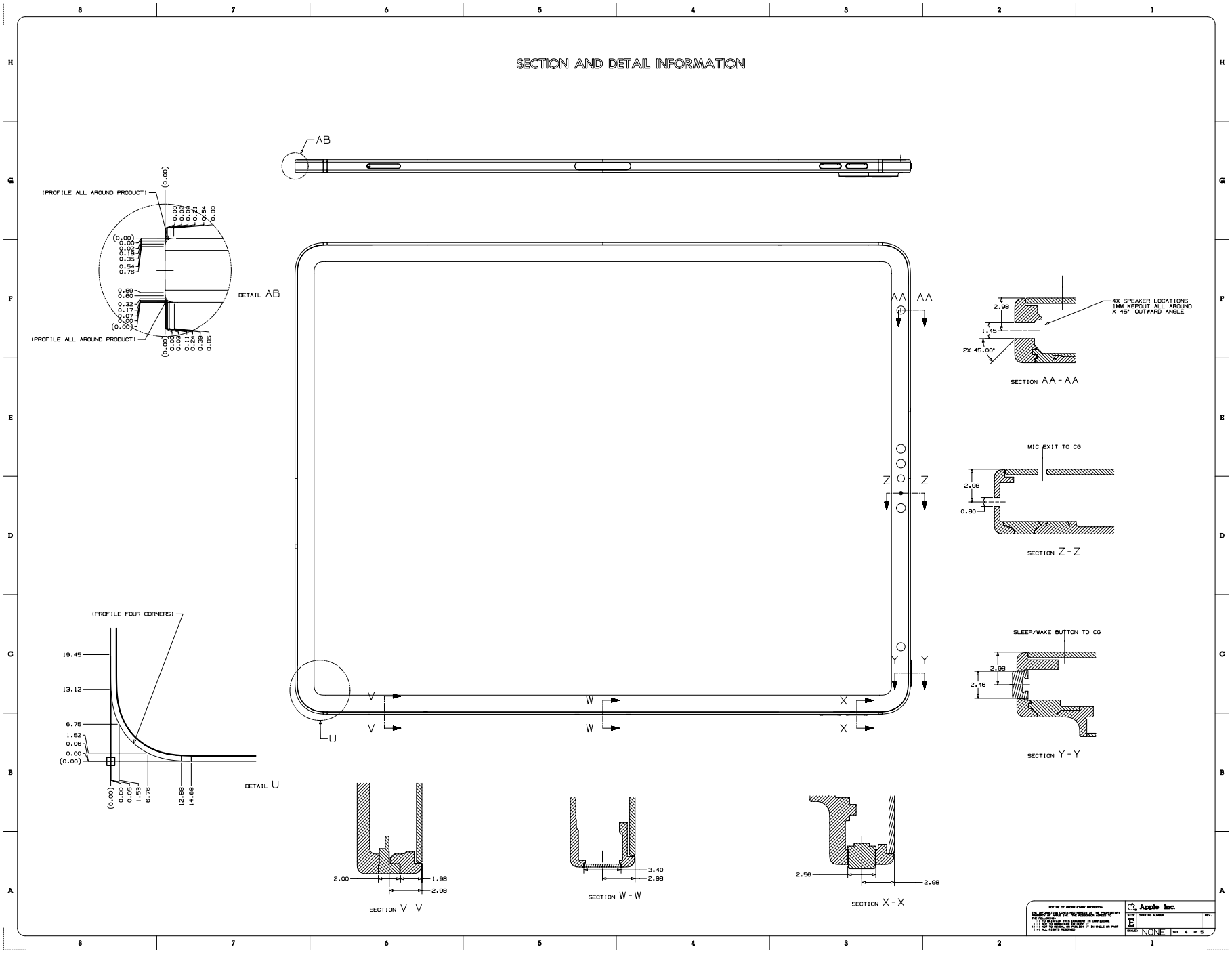

41.47 iPad Pro (12.9-inch) 4th Generation 5 of 5

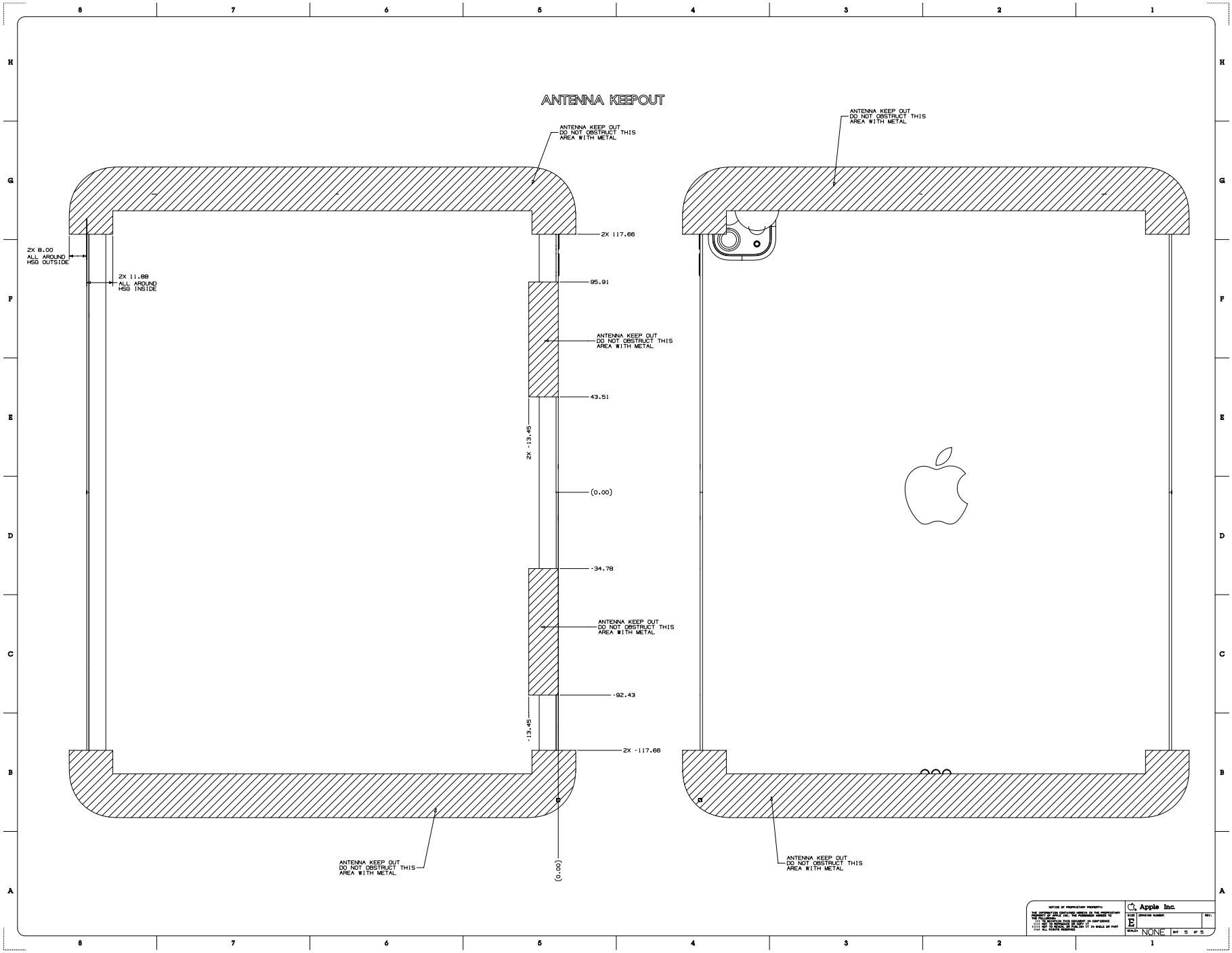

Copyright © 2021 Apple Inc. All Rights Reserved.

41.48 iPad Pro (11-inch) 2nd Generation 1 of 5

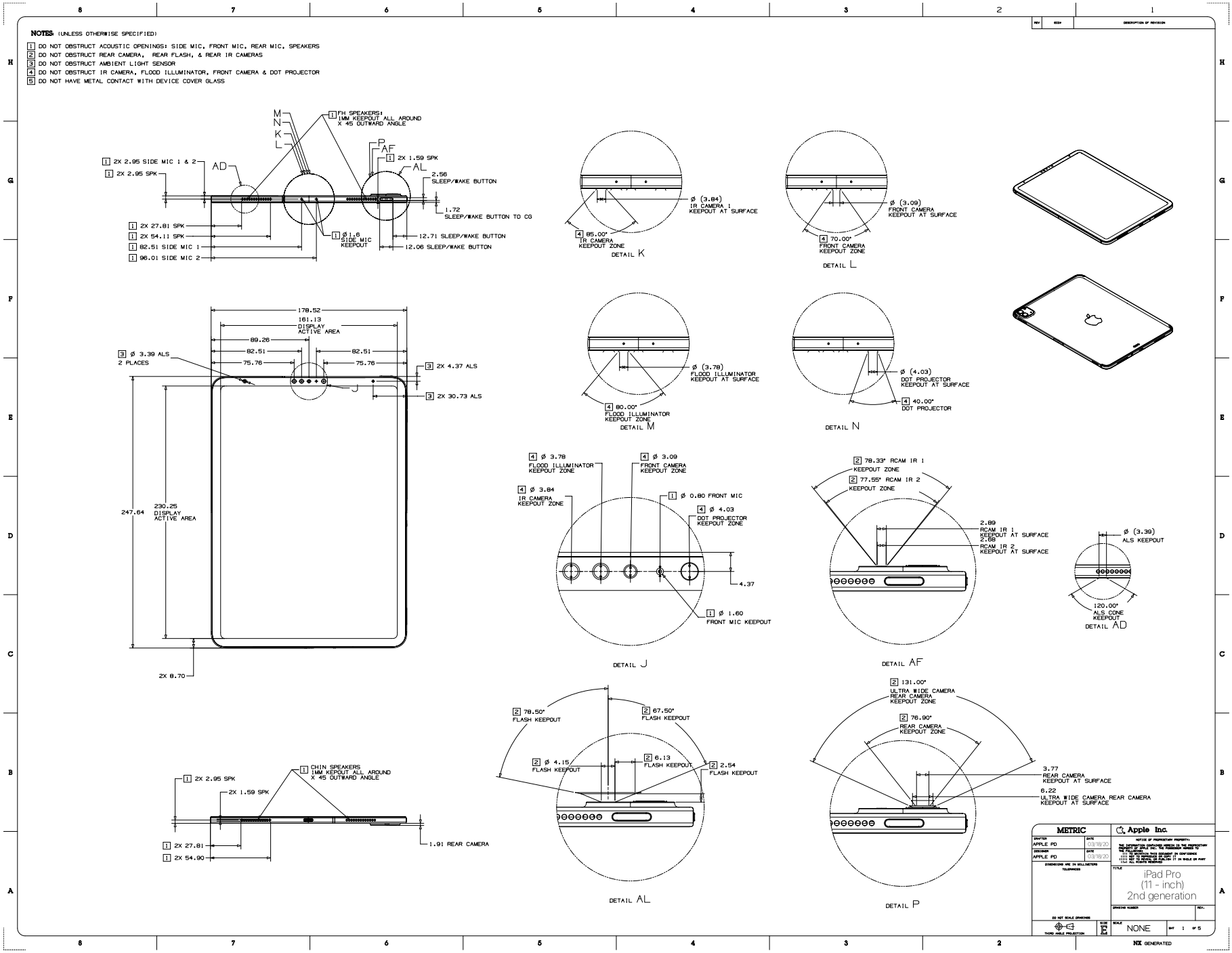

41.49 iPad Pro (11-inch) 2nd Generation 2 of 5

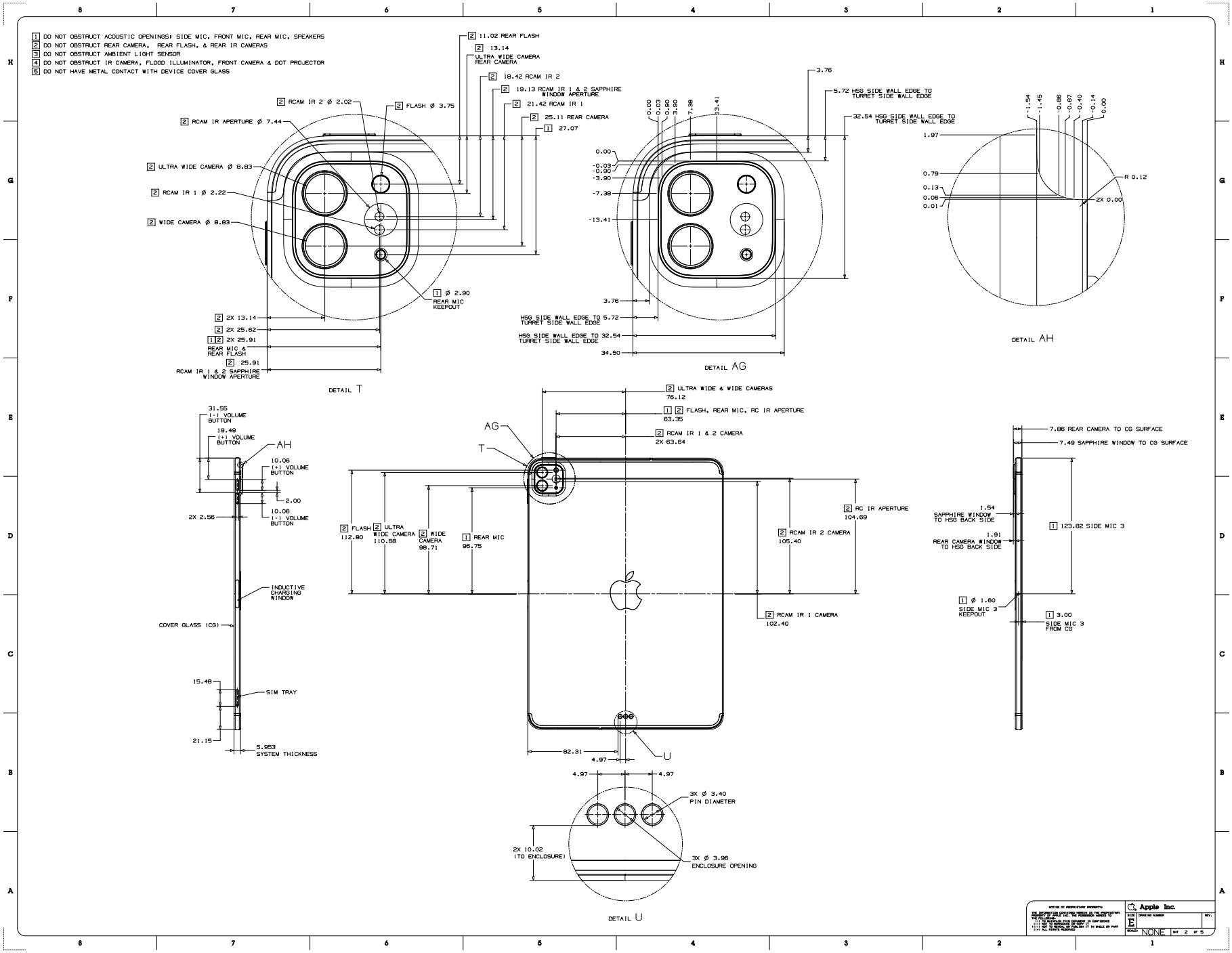

41.50 iPad Pro (11-inch) 2nd Generation 3 of 5

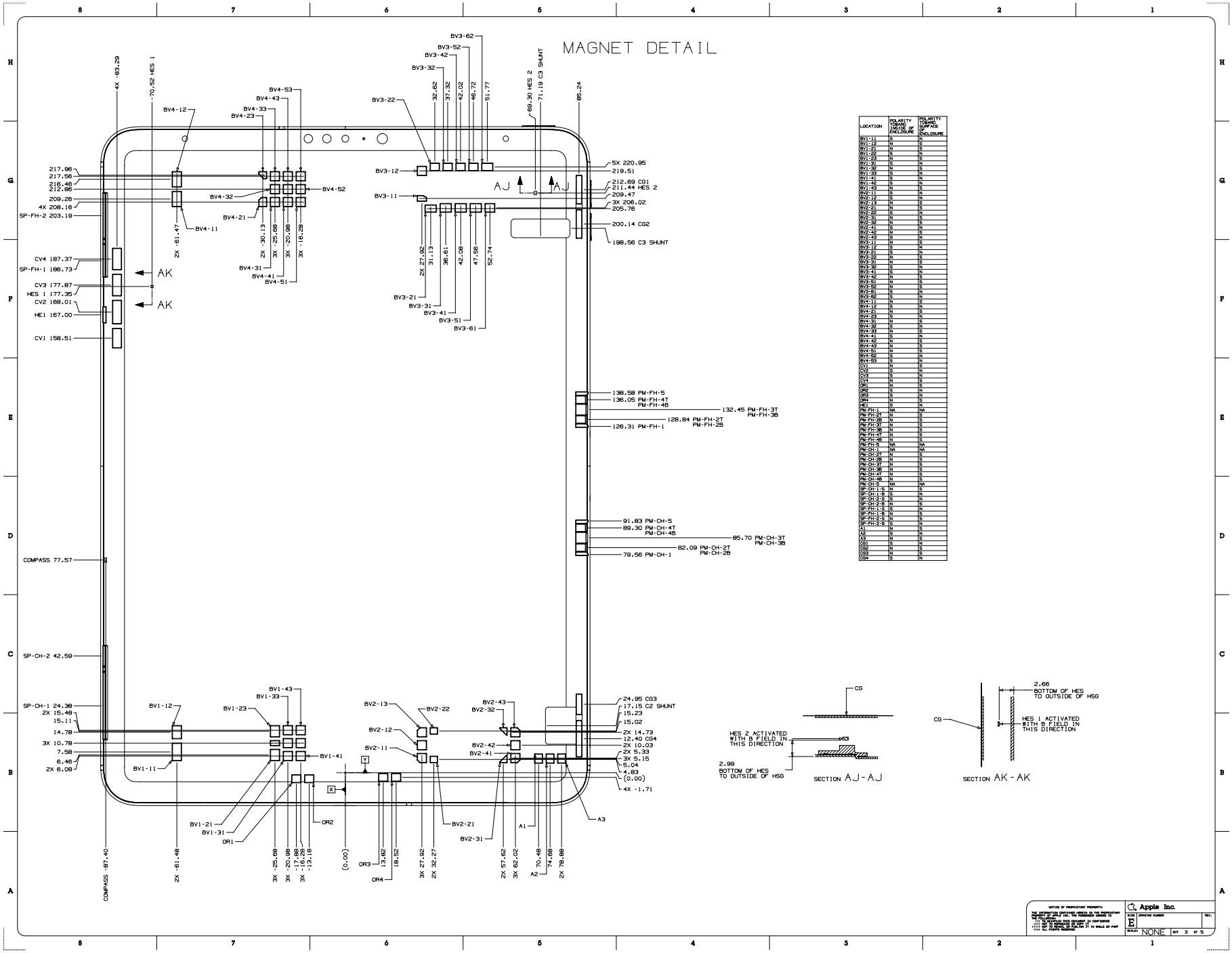

LOCATION	POLARITY TOWARD SURFACE OF ENCLOSURE	POLARITY TOWARD SURFACE OF ENCLOSURE
BV1-11	S	N
BV1-12	N	S
BV1-21	N	S
BV1-22	S	N
BV1-23	N	S
BV1-31	S	N
BV1-32	N	S
BV1-33	S	N
BV1-41	S	N
BV1-42	S	N
BV1-43	N	S
BV2-11	S	N
BV2-12	S	N
BV2-13	N	S
BV2-21	N	S
BV2-22	S	N
BV2-31	N	S
BV2-32	N	S
BV2-41	S	N
BV2-42	N	S
BV2-43	N	S
BV3-11	N	S
BV3-12	S	N
BV3-21	S	N
BV3-22	N	S
BV3-31	N	S
BV3-32	S	N
BV3-41	S	N
BV3-42	N	S
BV3-51	N	S
BV3-52	N	S
BV3-61	S	N
BV3-62	S	N
BV4-11	N	S
BV4-12	S	N
BV4-21	N	S
BV4-23	S	N
BV4-31	N	S
BV4-32	S	N
BV4-33	N	S
BV4-41	S	N
BV4-42	N	S
BV4-43	N	S
BV4-51	N	S
BV4-52	S	N
BV4-53	S	N
CV1	N	S
CV2	S	N
CV3	S	N
CV4	N	S
OR1	N	S
OR2	S	N
OR3	S	N
OR4	N	S
HE1	S	N
PM-FH-1	NA	NA
PM-FH-2T	N	S
PM-FH-2B	N	S
PM-FH-3T	N	S
PM-FH-3B	N	S
PM-FH-4T	N	S
PM-FH-4B	N	S
PM-FH-5	NA	NA
PM-CH-1	NA	NA
PM-CH-2T	N	S
PM-CH-2B	N	S
PM-CH-3T	N	S
PM-CH-3B	N	S
PM-CH-4T	N	S
PM-CH-4B	N	S
PM-CH-5	NA	NA
SP-CH-1-S	N	S
SP-CH-1-B	S	N
SP-CH-2-S	S	N
SP-CH-2-B	N	S
SP-FH-1-S	S	N
SP-FH-1-B	N	S
SP-FH-2-S	N	S
SP-FH-2-B	S	N
A1	N	S
A2	S	N
A3	N	S
CG1	S	N
CG2	N	S
CG3	N	S
CG4	S	N

41.51 iPad Pro (11-inch) 2nd Generation 4 of 5

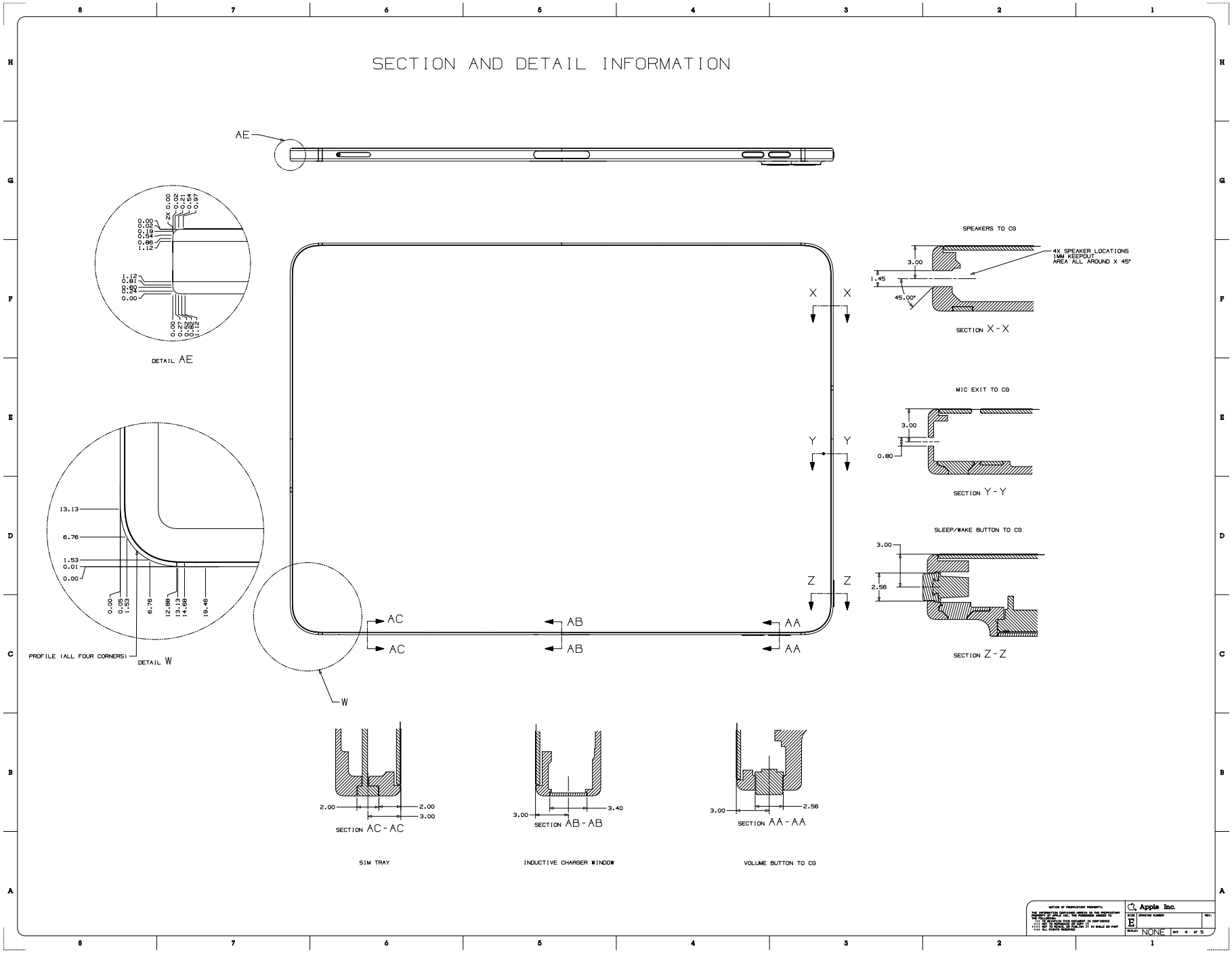

41.52 iPad Pro (11-inch) 2nd Generation 5 of 5

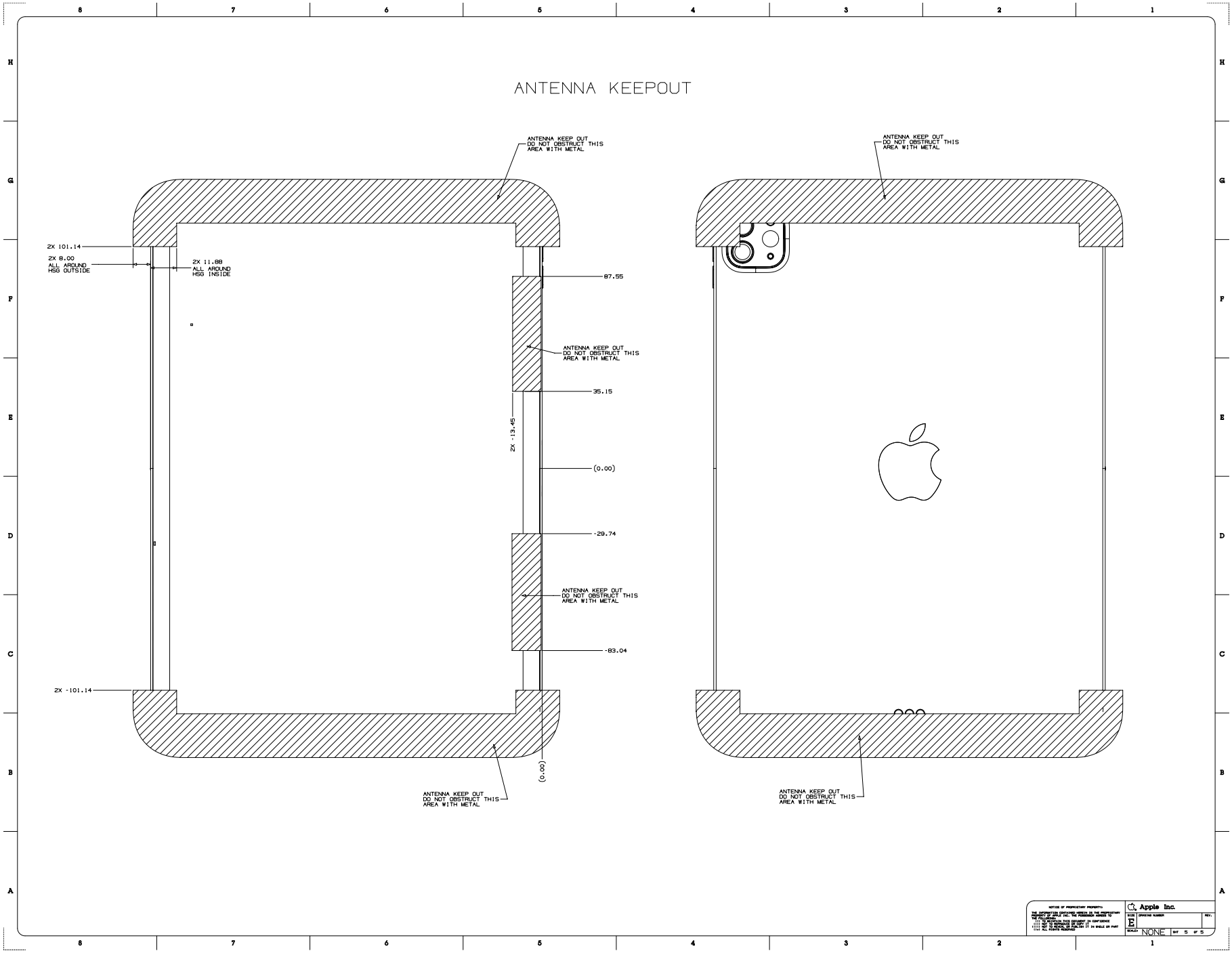

41.53 iPad (7th generation) & iPad (8th generation) 1 of 3

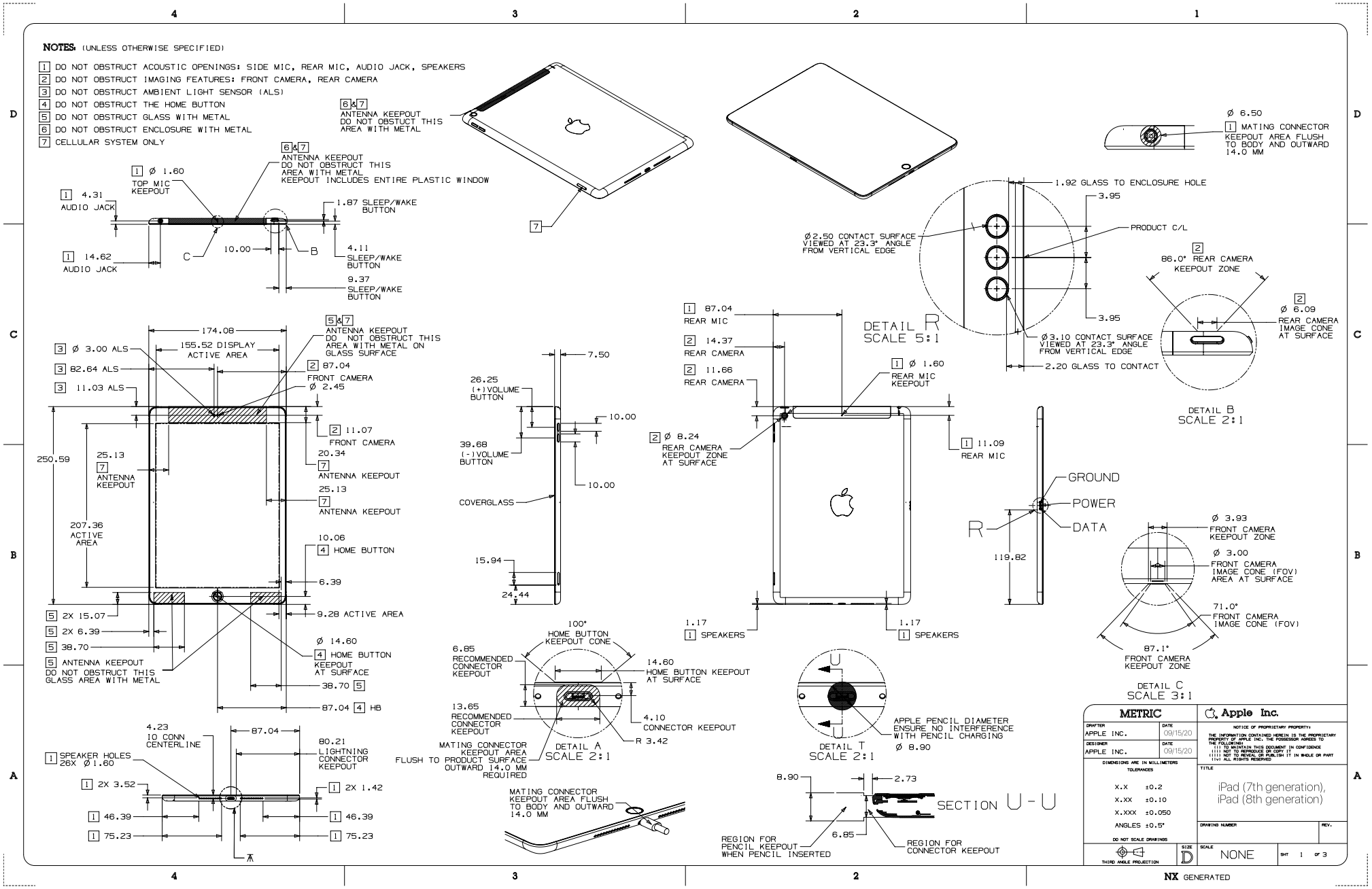

41.54 iPad (7th generation) & iPad (8th generation) 2 of 3

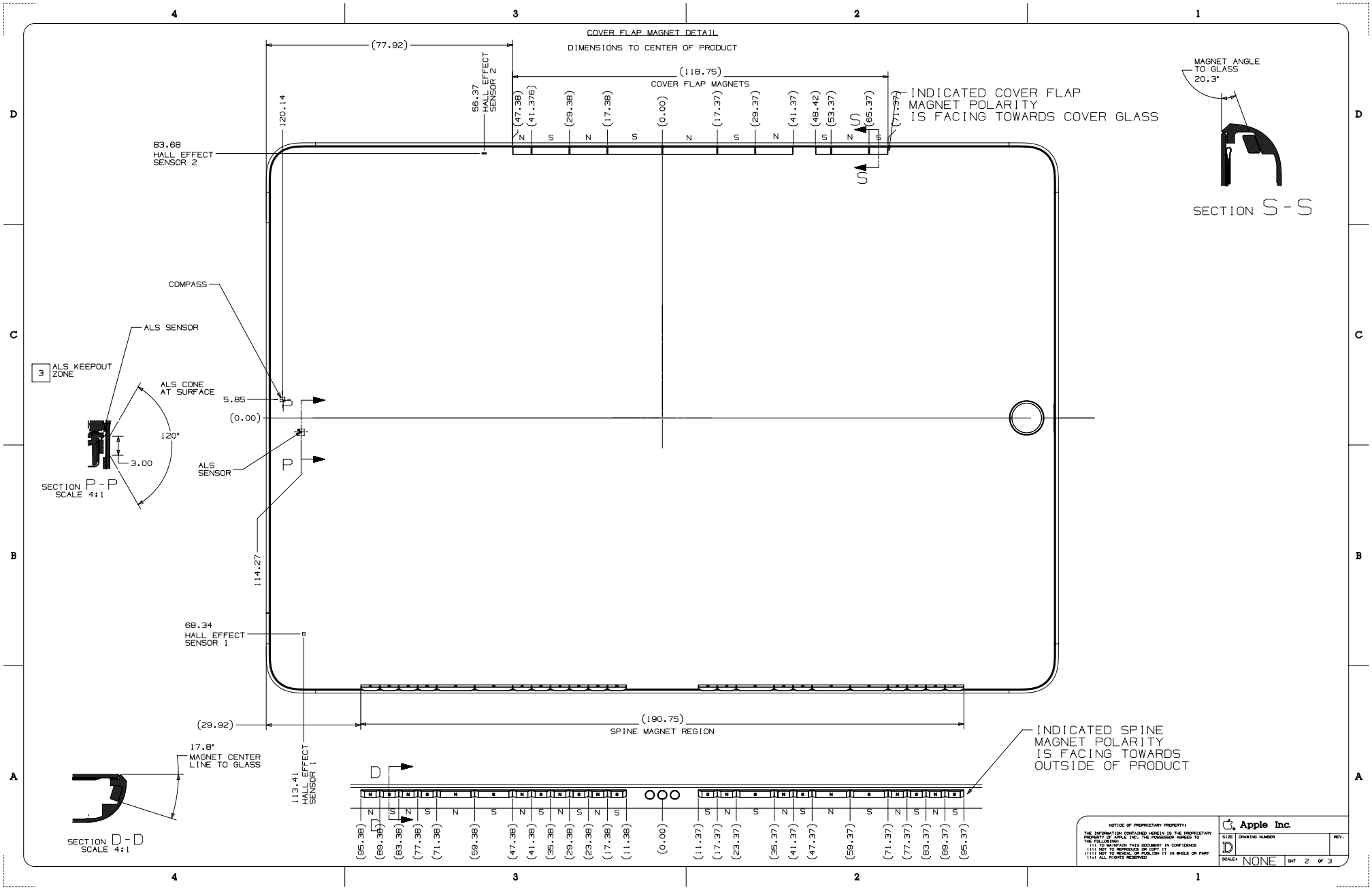

41.55 iPad (7th generation) & iPad (8th generation) 3 of 3

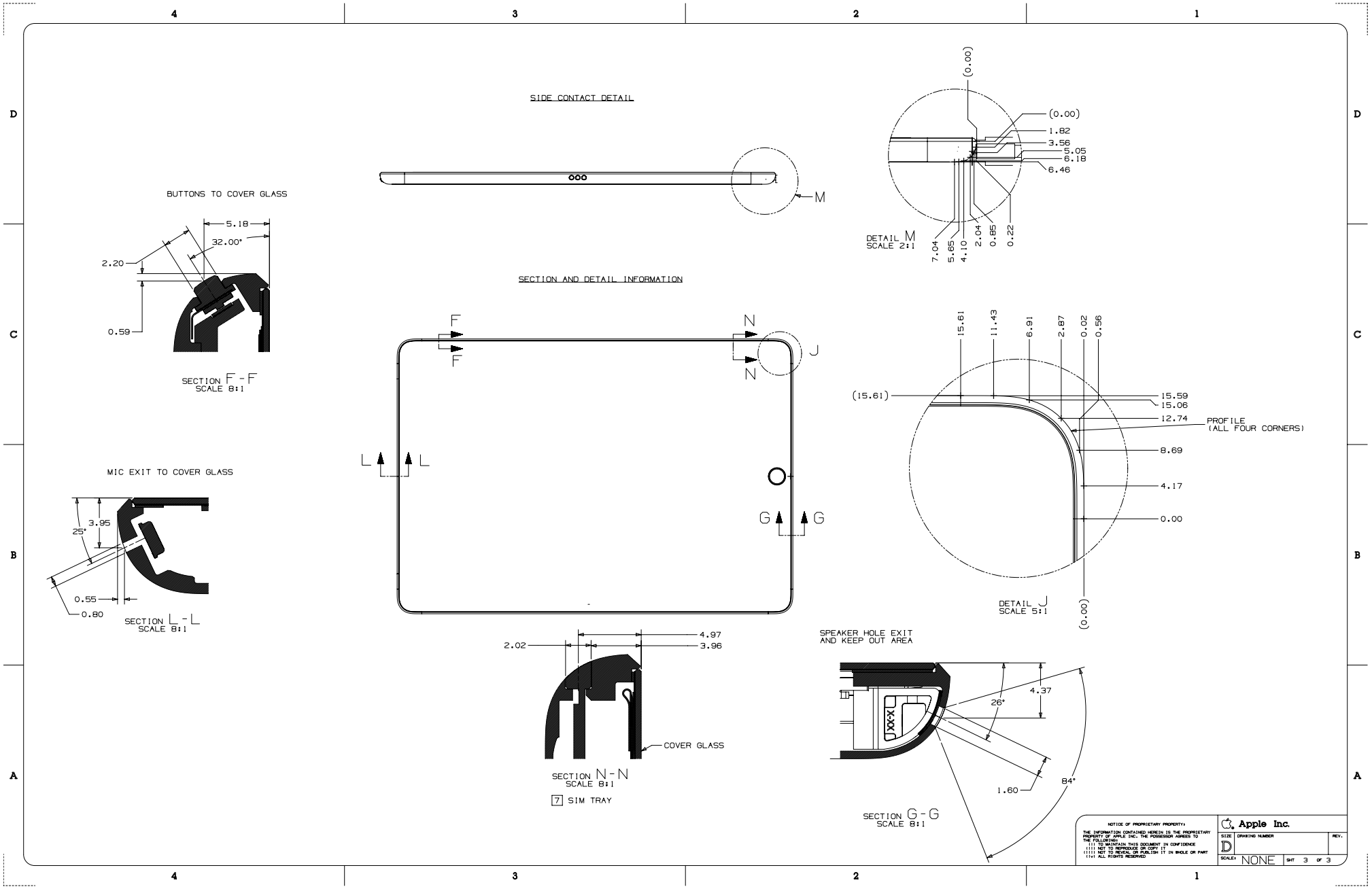

41.56 iPad Air (3rd generation) with Wi-Fi 1 of 3

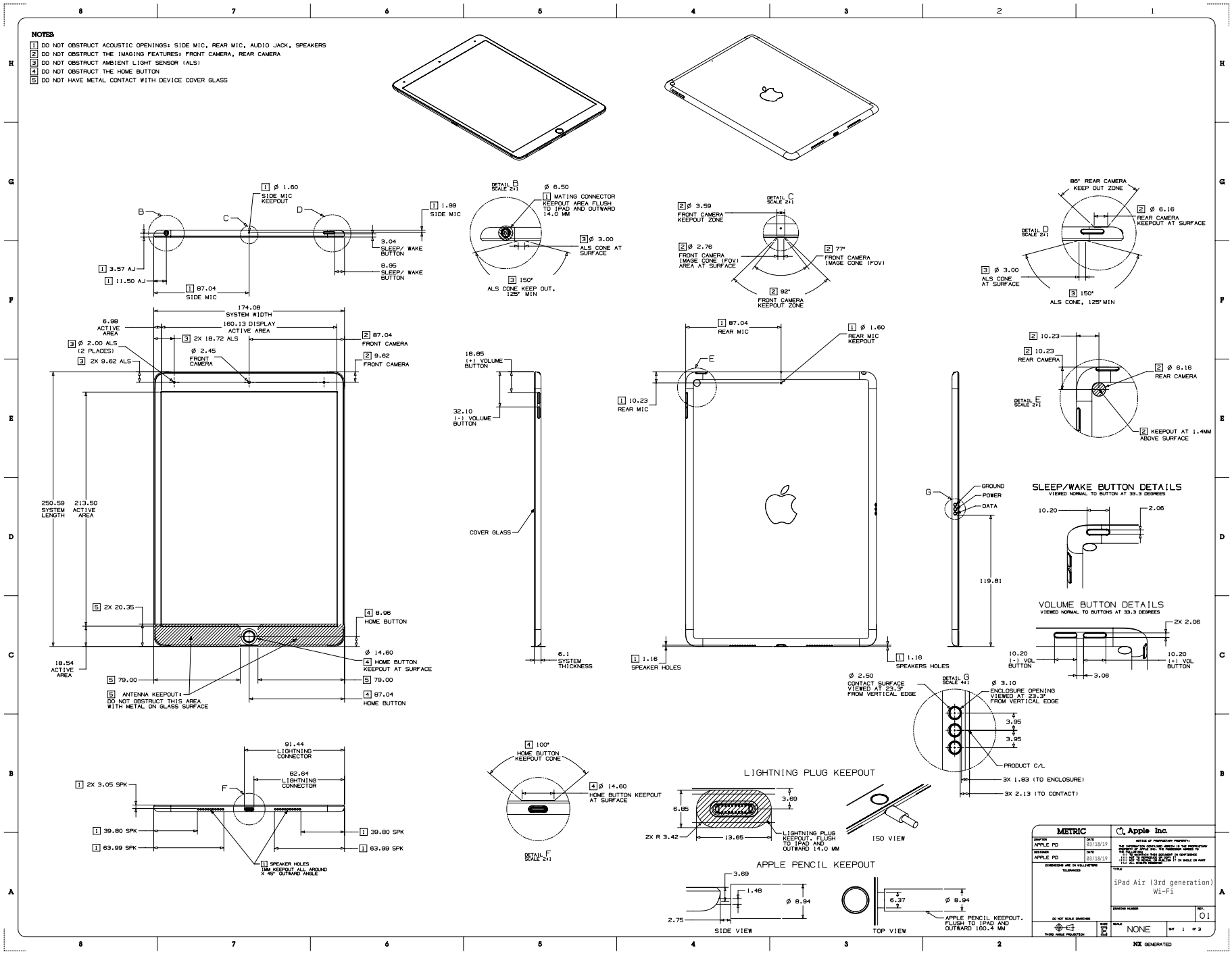

41.57 iPad Air (3rd generation) with Wi-Fi 2 of 3

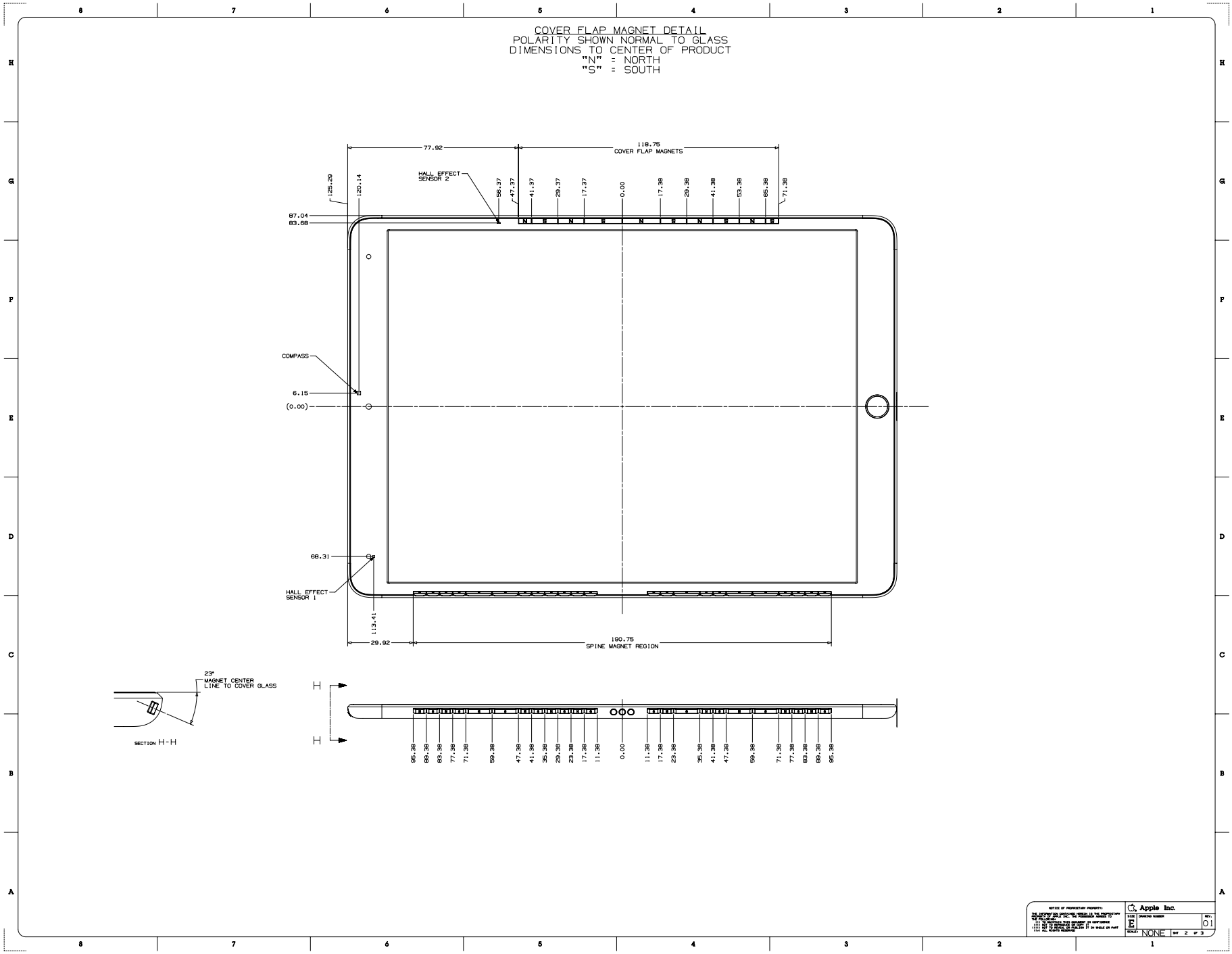

41.58 iPad Air (3rd generation) with Wi-Fi 3 of 3

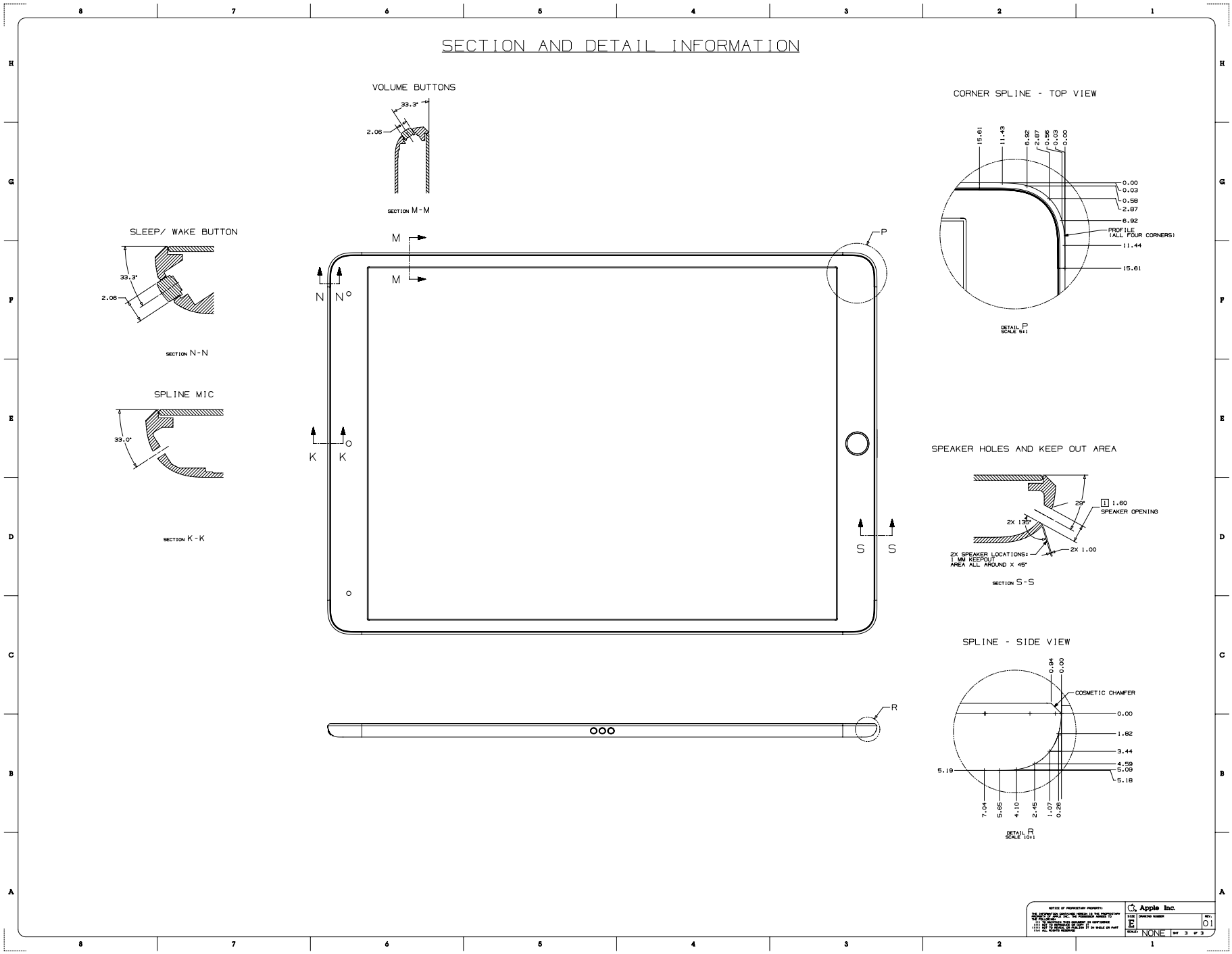

41.59 iPad Air (3rd generation) with Wi-Fi + Cellular 1 of 3

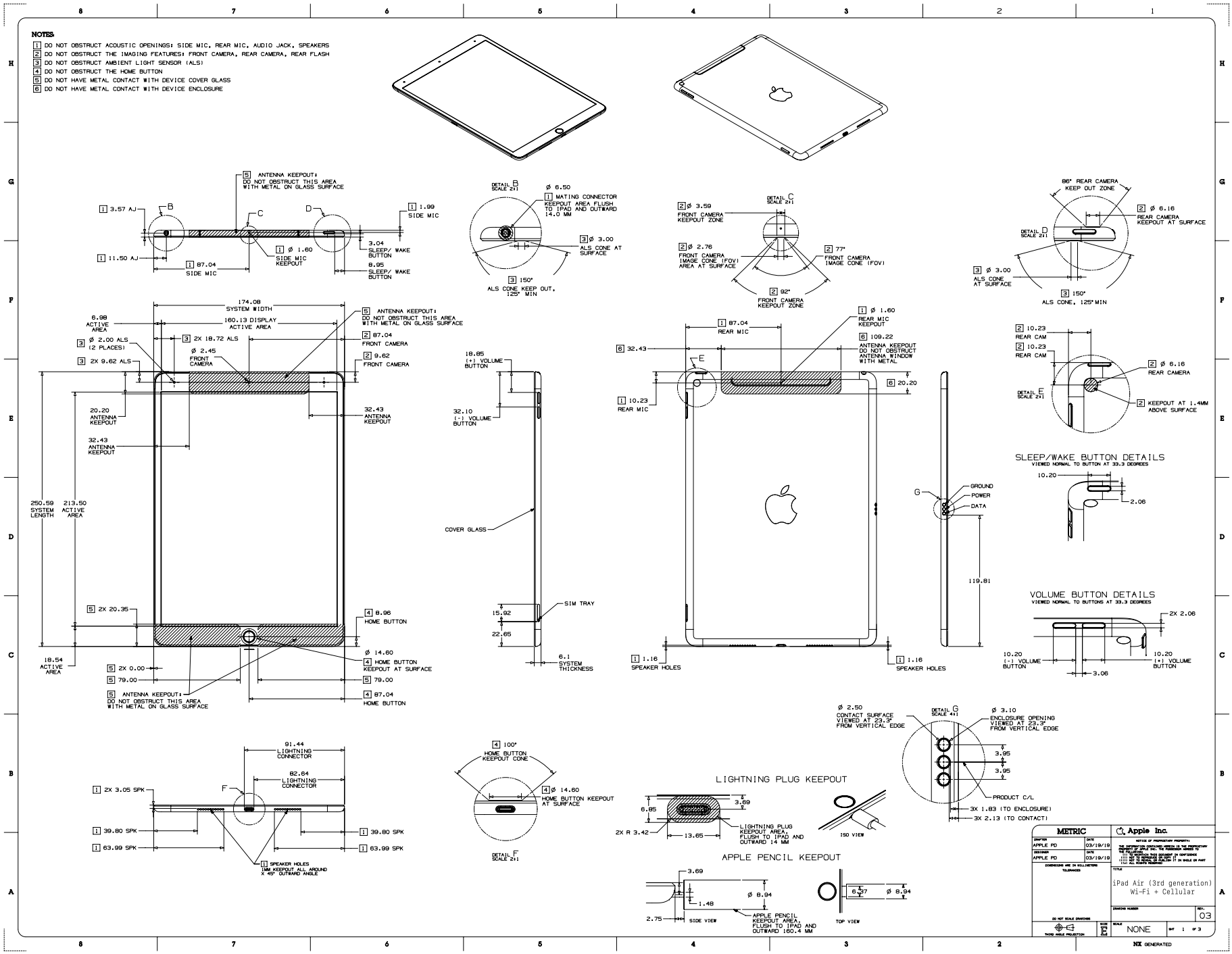

41.60 iPad Air (3rd generation) with Wi-Fi + Cellular 2 of 3

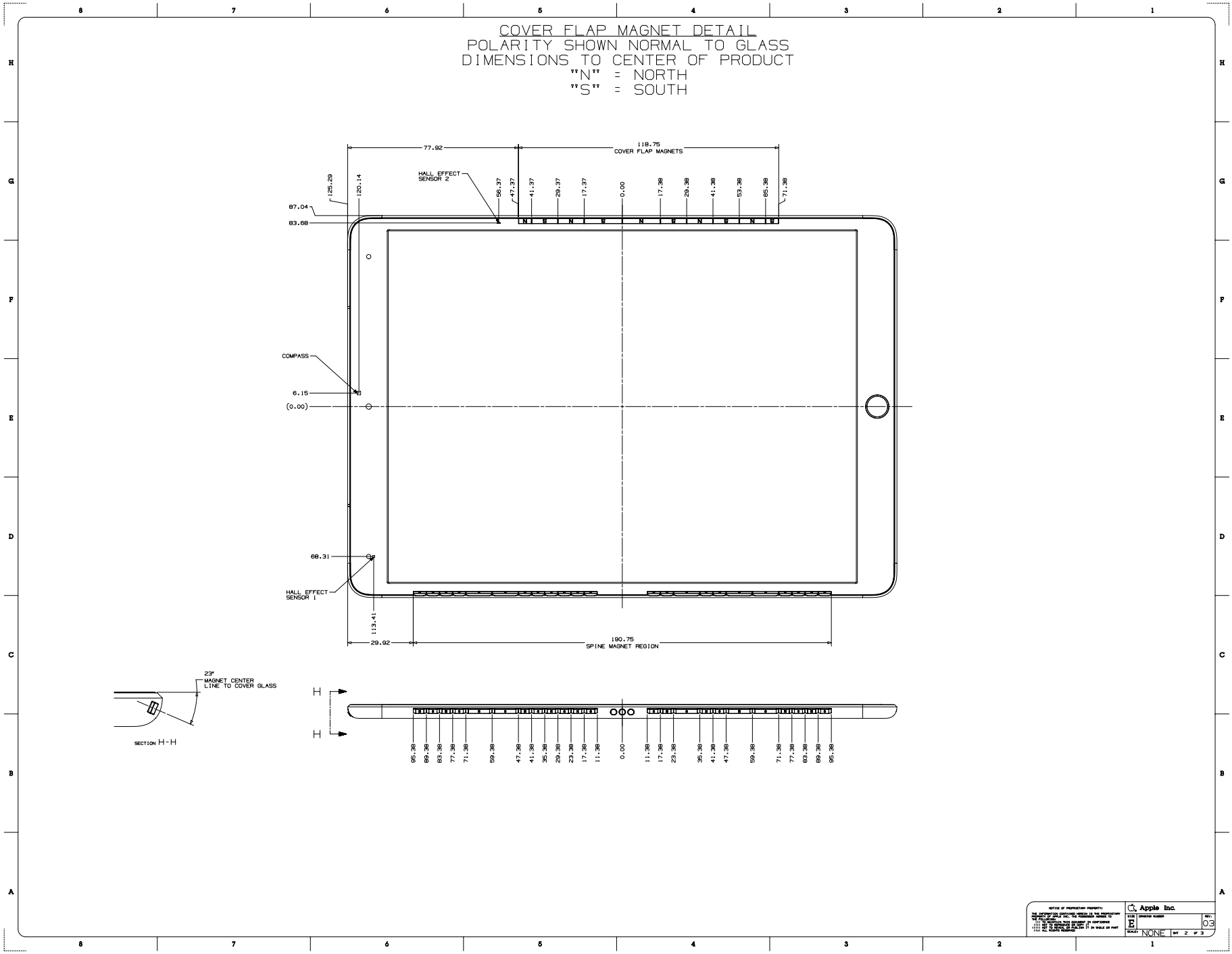

41.61 iPad Air (3rd generation) with Wi-Fi + Cellular 3 of 3

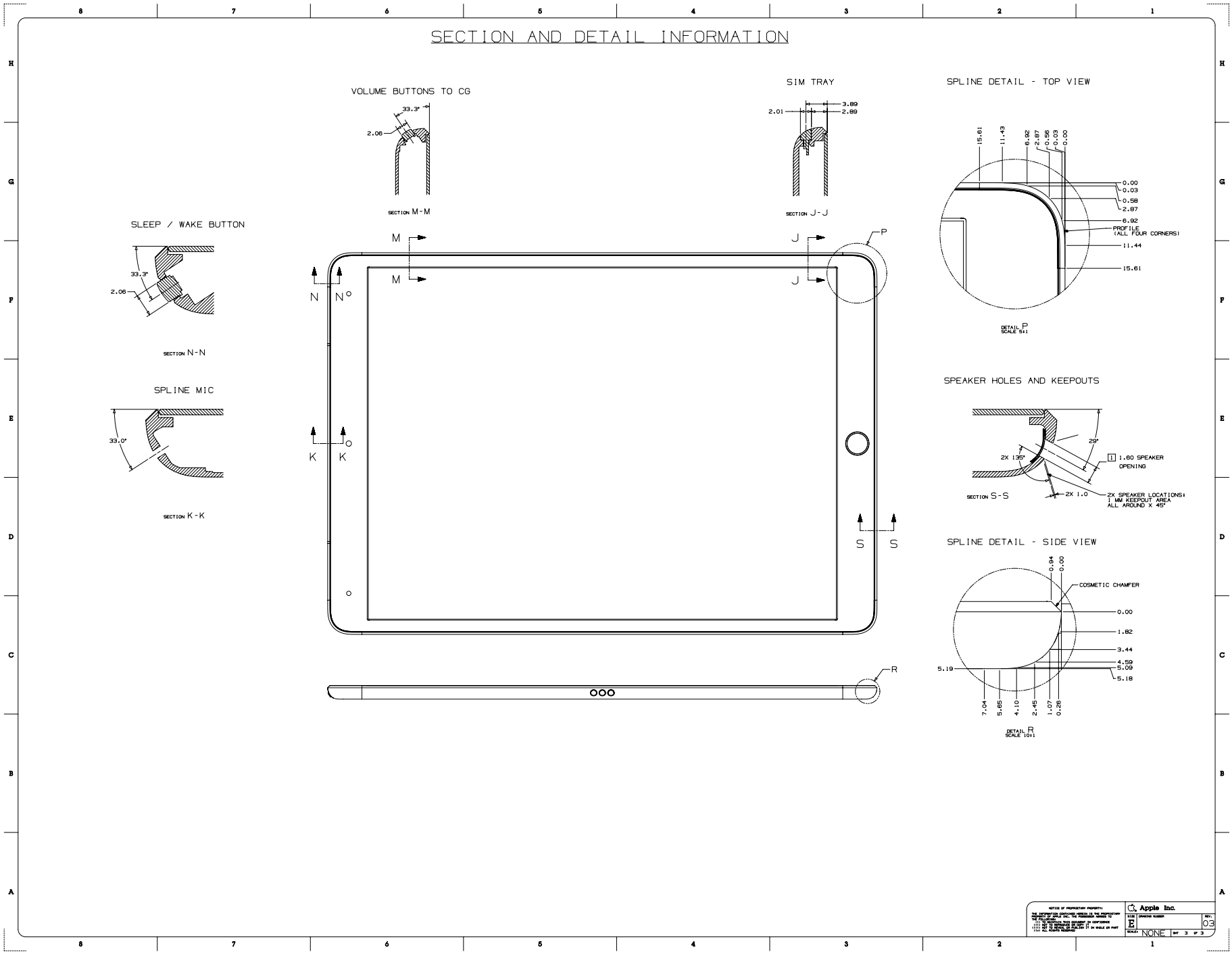

41.62 iPad mini (5th generation) with Wi-Fi 1 of 3

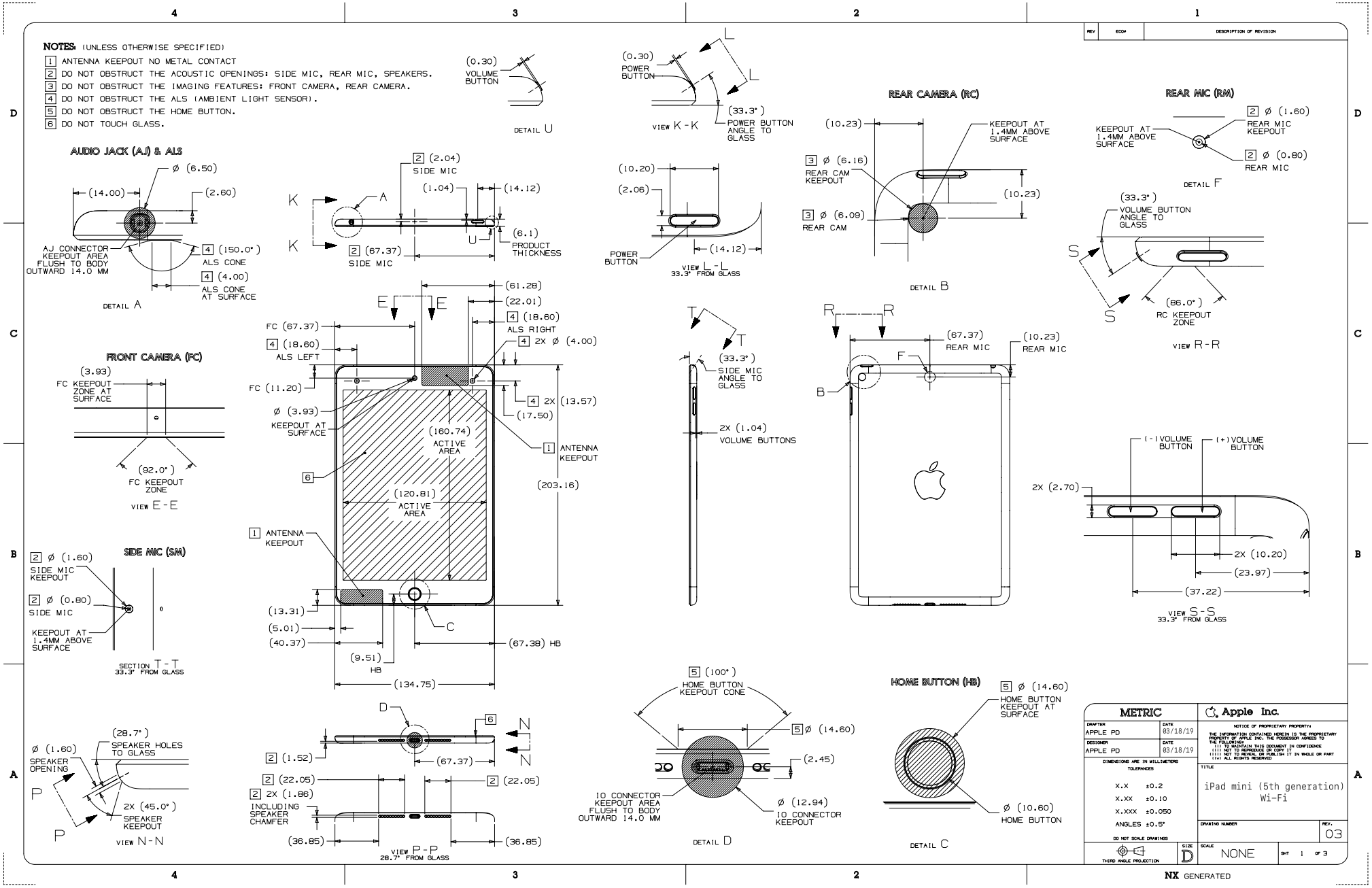

41.63 iPad mini (5th generation) with Wi-Fi 2 of 3

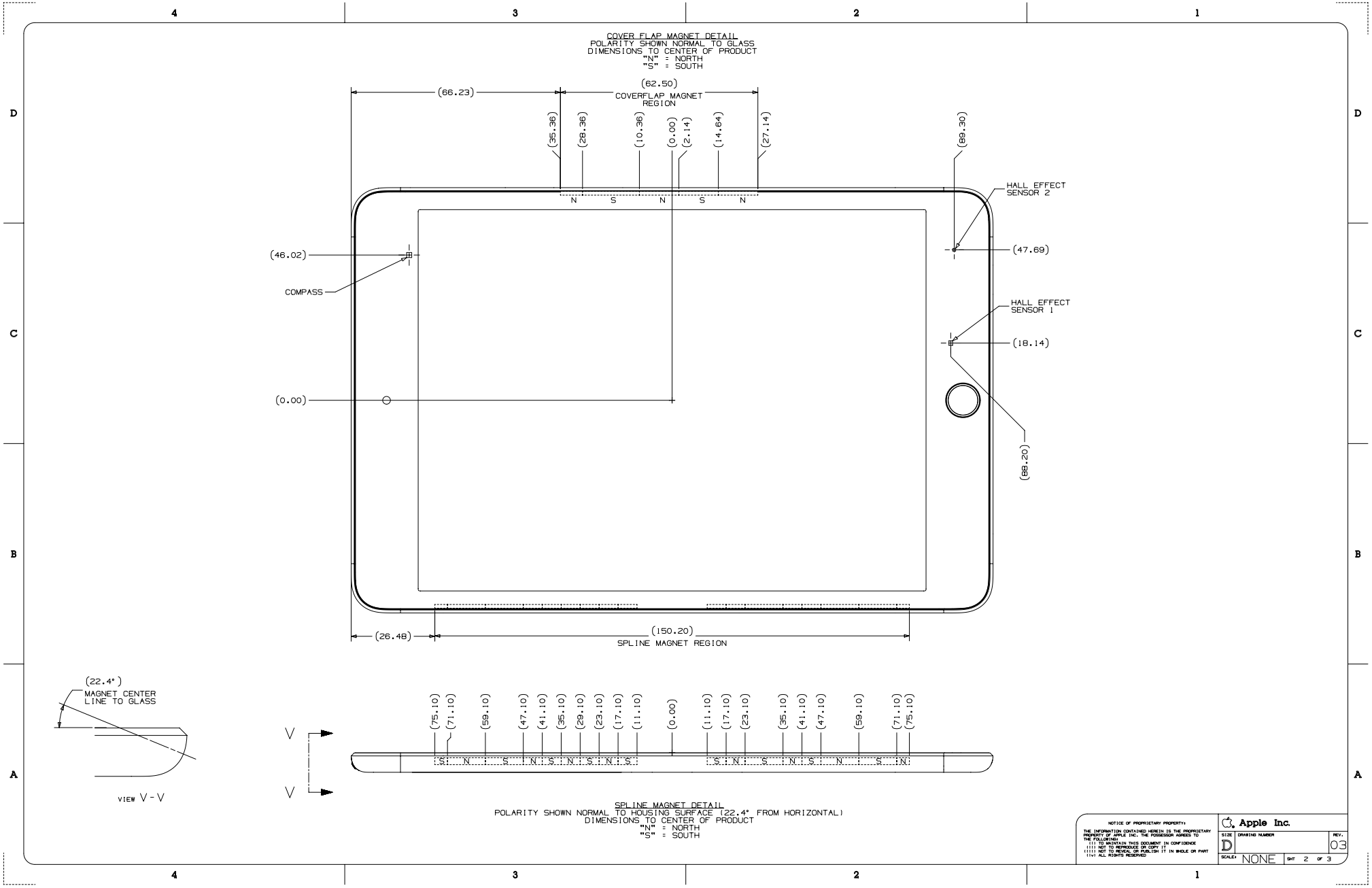

41.64 iPad mini (5th generation) with Wi-Fi 3 of 3

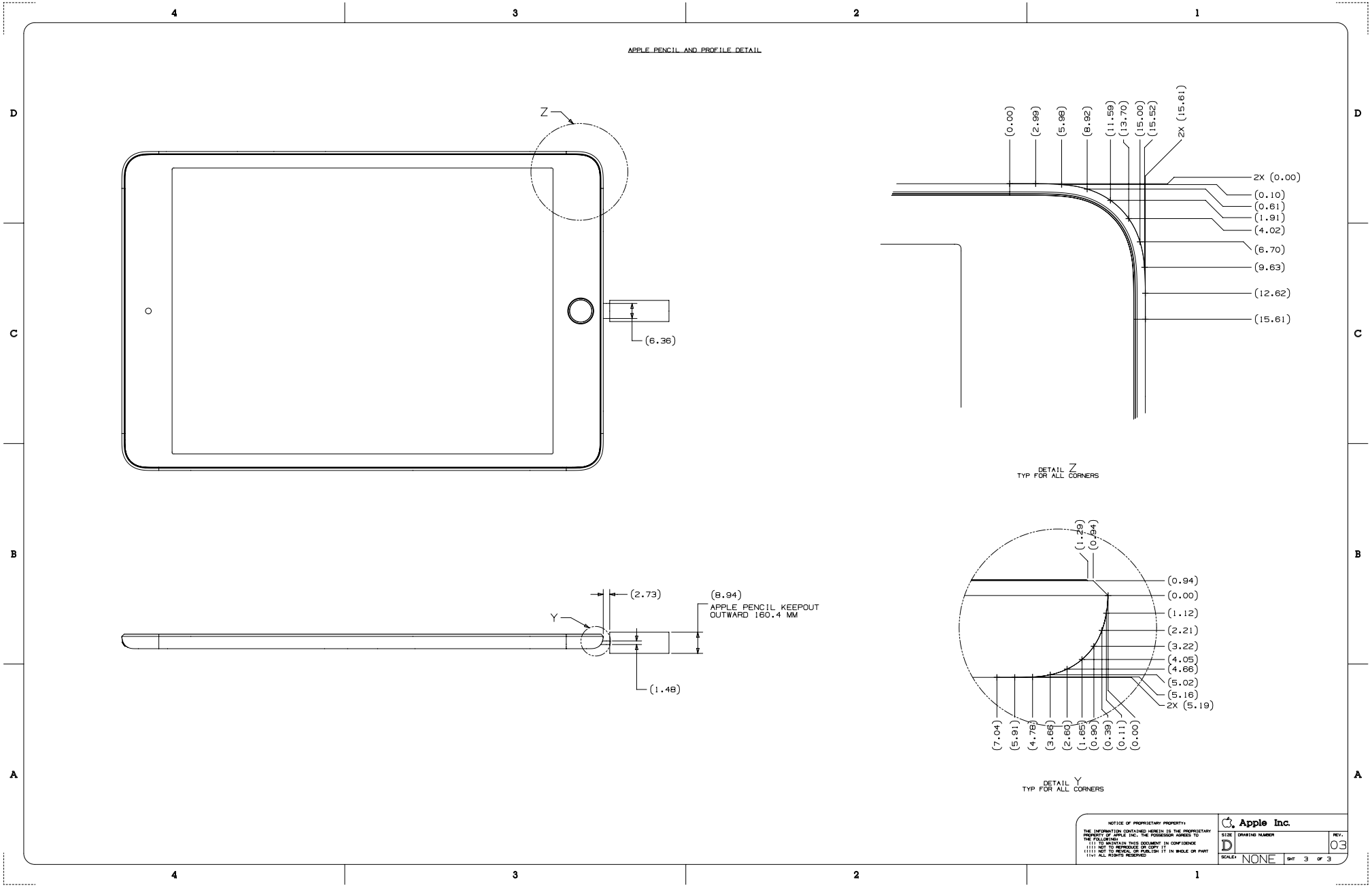

41.65 iPad mini (5th generation) with Wi-Fi + Cellular 1 of 3

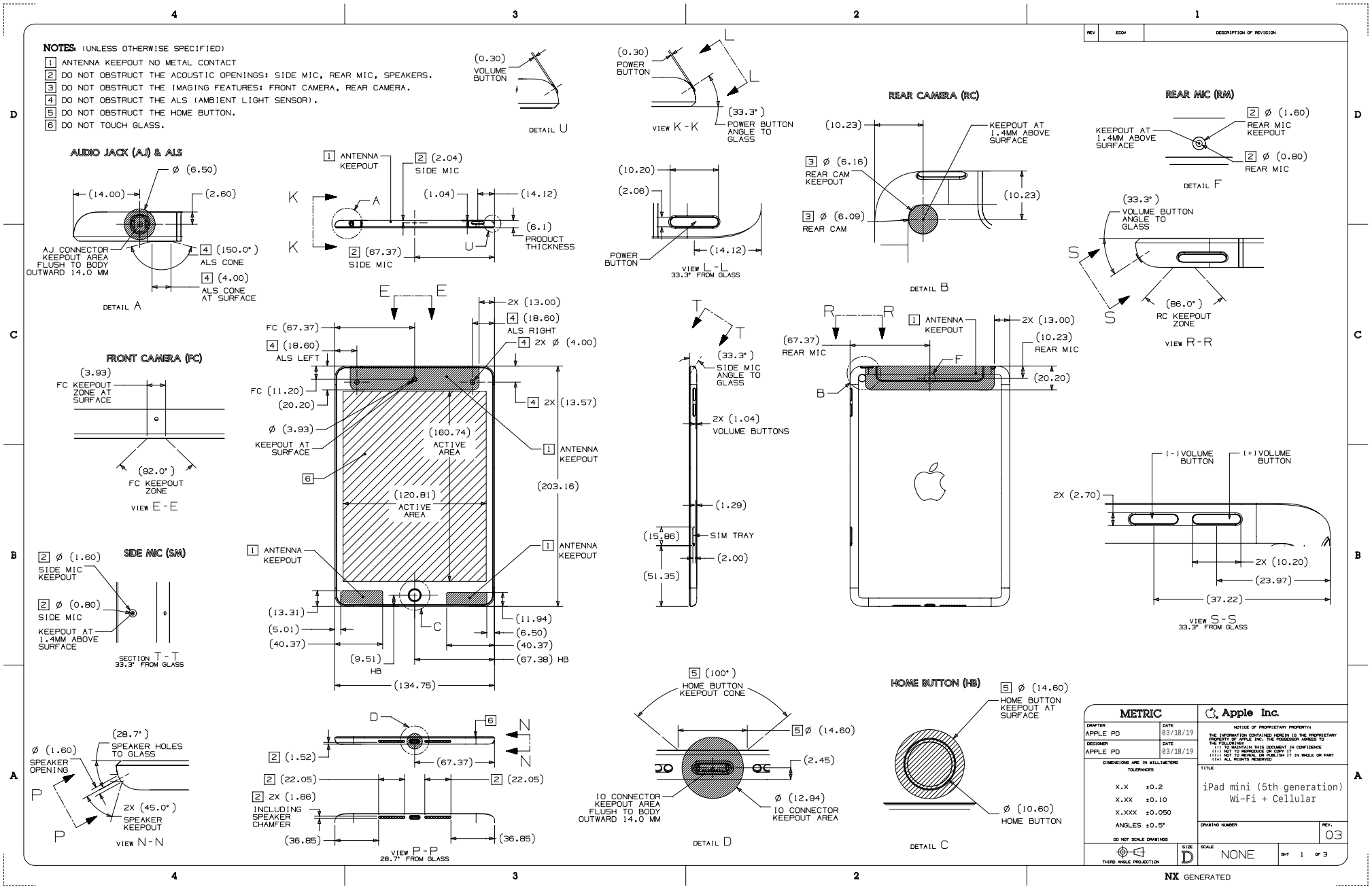

41.66 iPad mini (5th generation) with Wi-Fi + Cellular 2 of 3

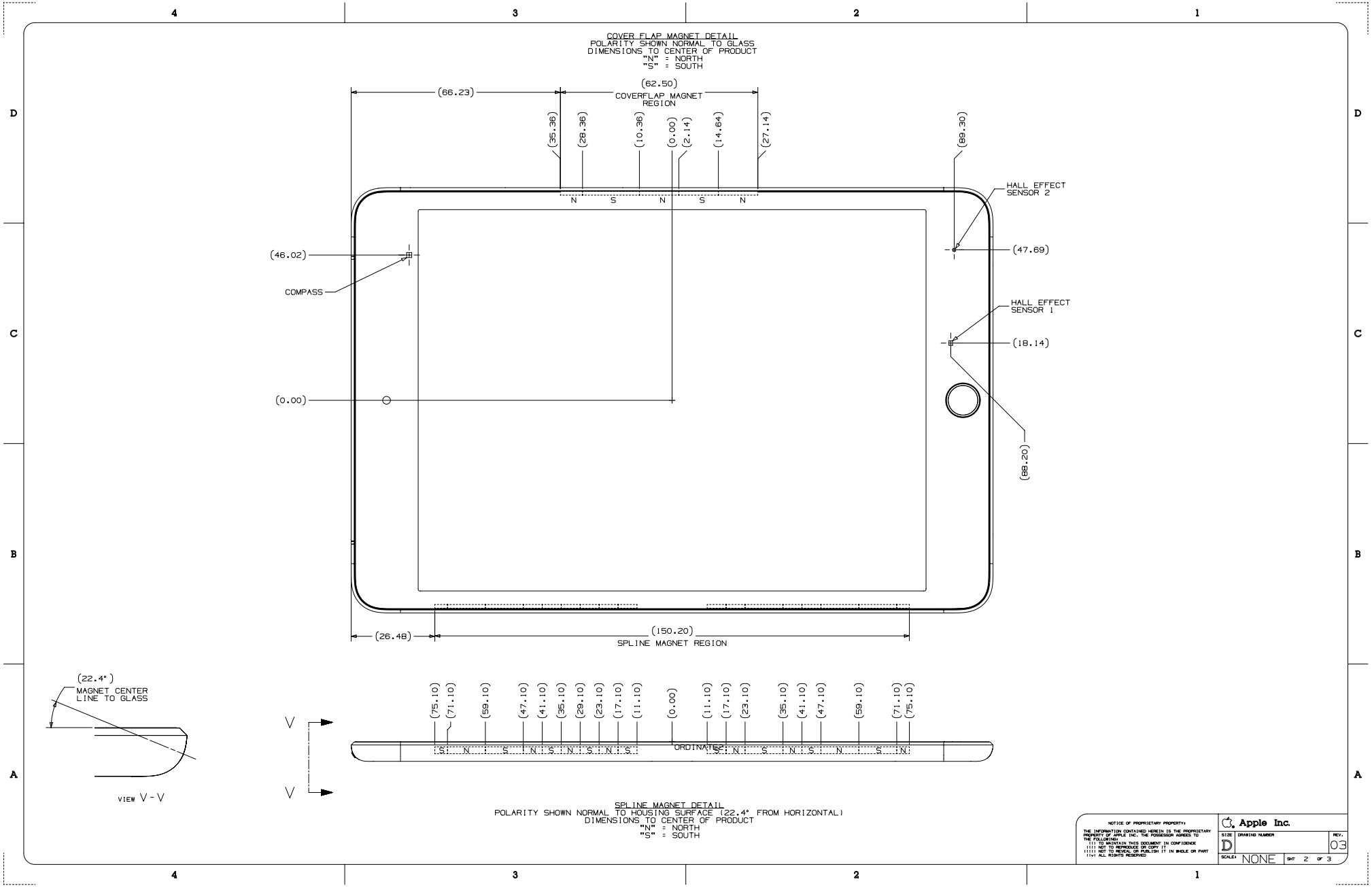

41.67 iPad mini (5th generation) with Wi-Fi + Cellular 3 of 3

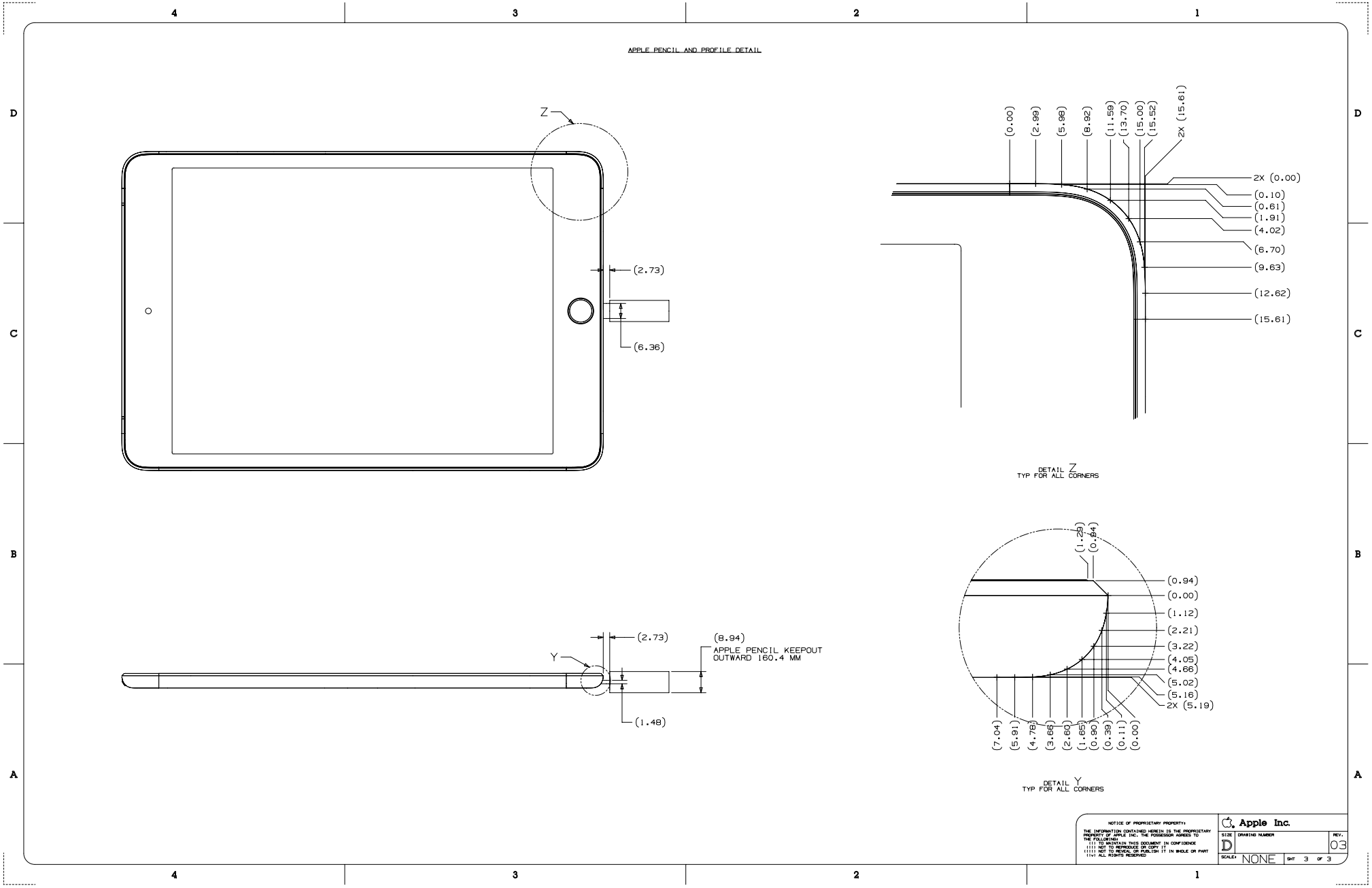

41.68 iPad Pro (12.9-inch) 3rd Generation 1 of 3

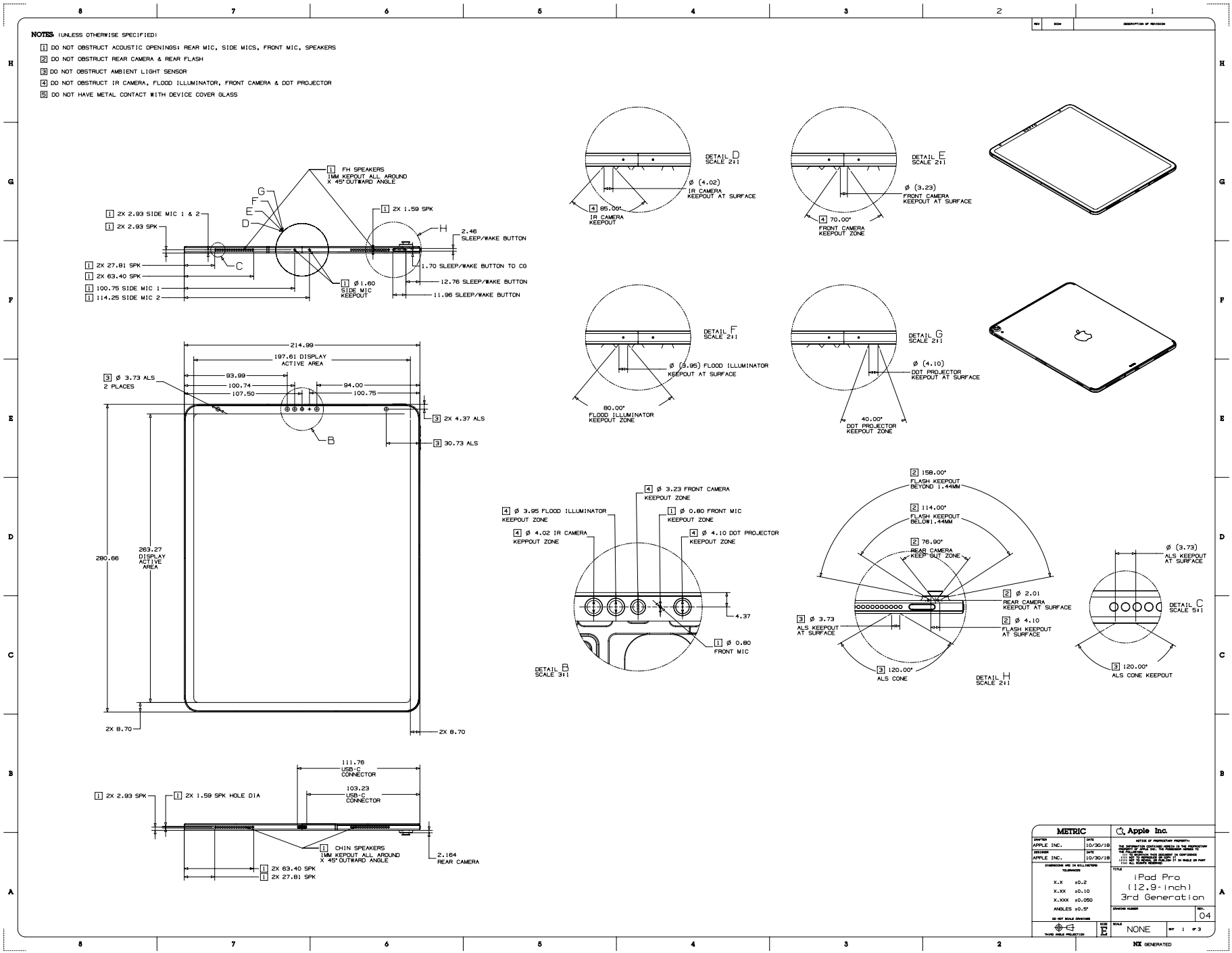

41.69 iPad Pro (12.9-inch) 3rd Generation 2 of 3

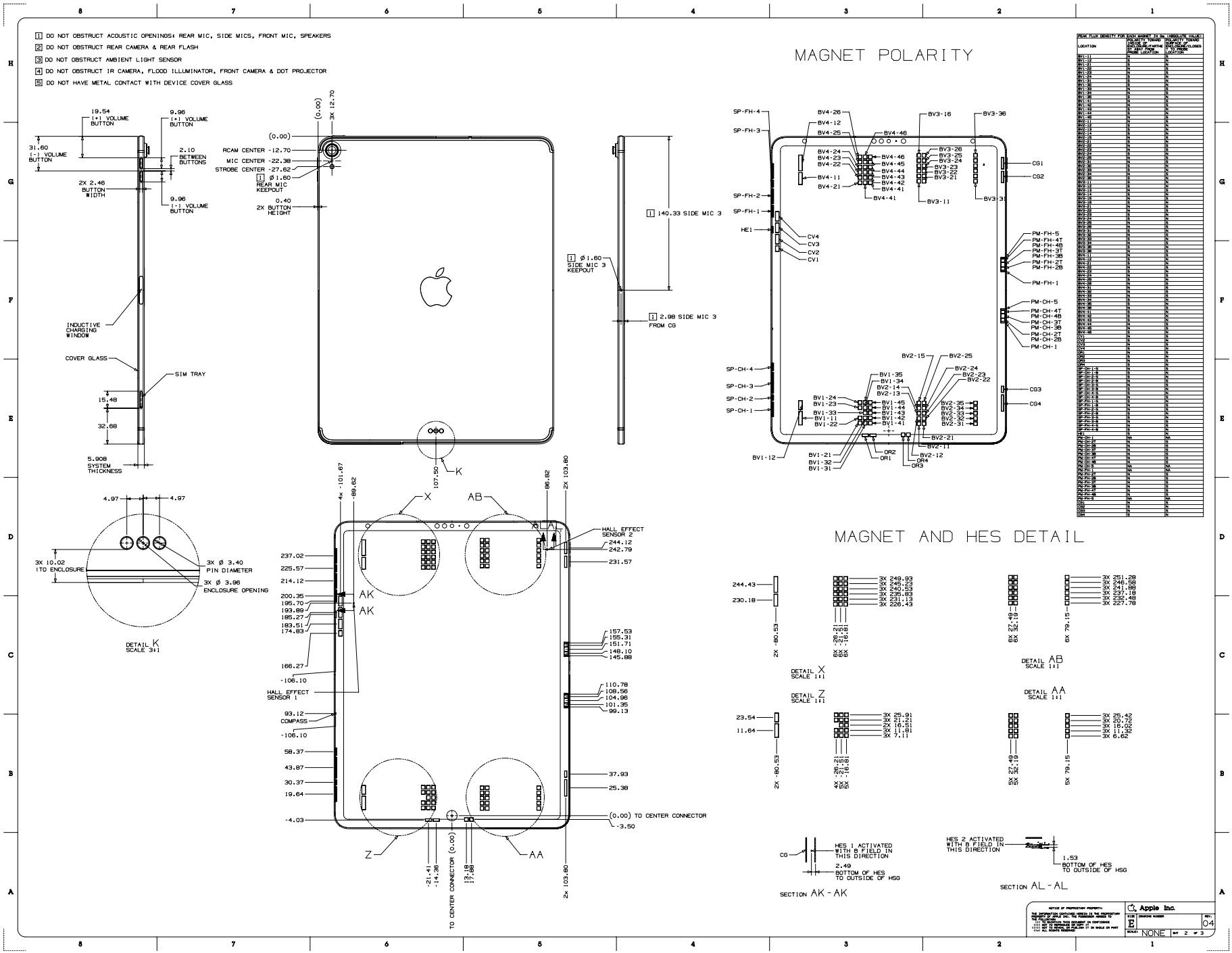

41.70 iPad Pro (12.9-inch) 3rd Generation 3 of 3

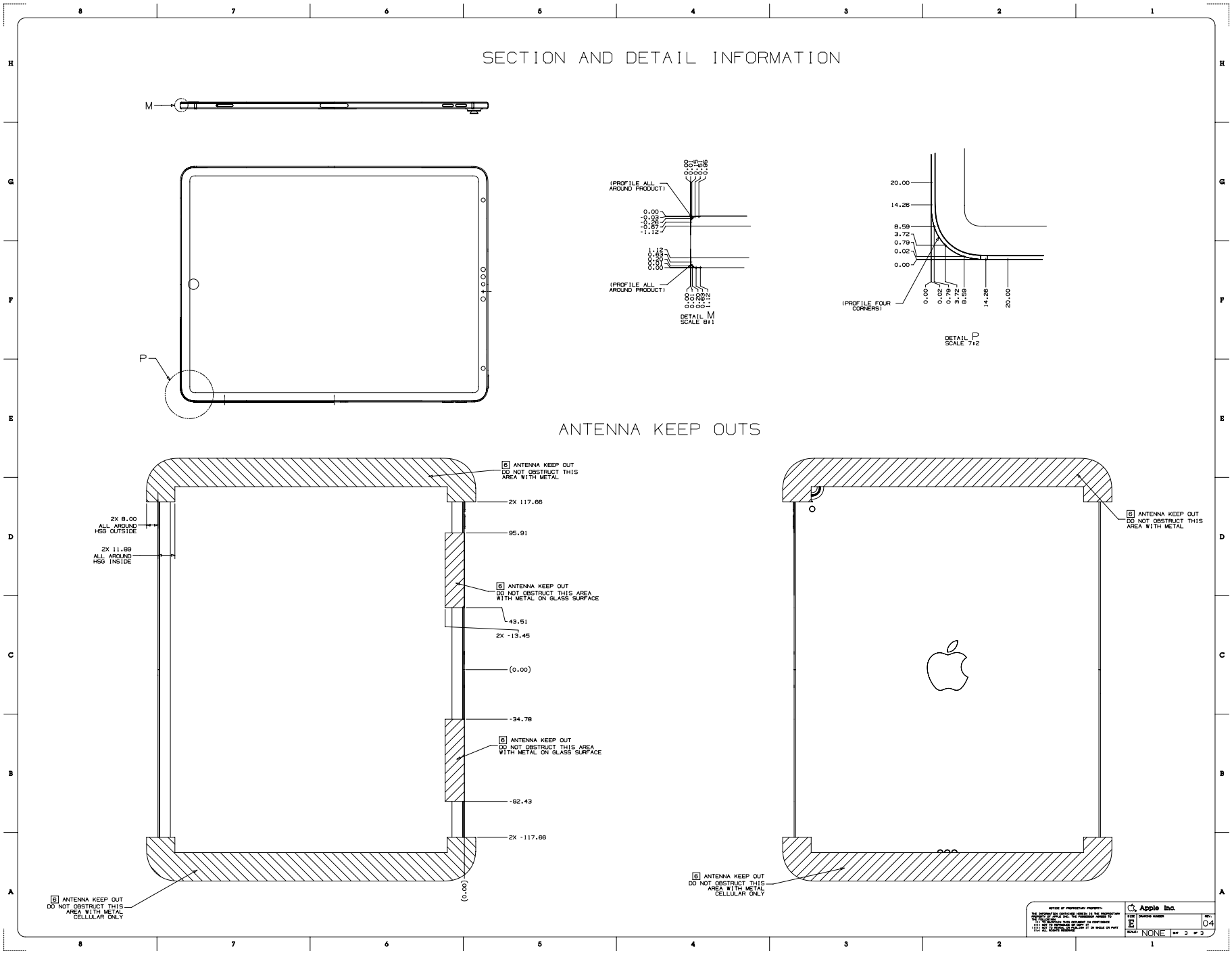

41.71 iPad Pro (11-inch) 1 of 3

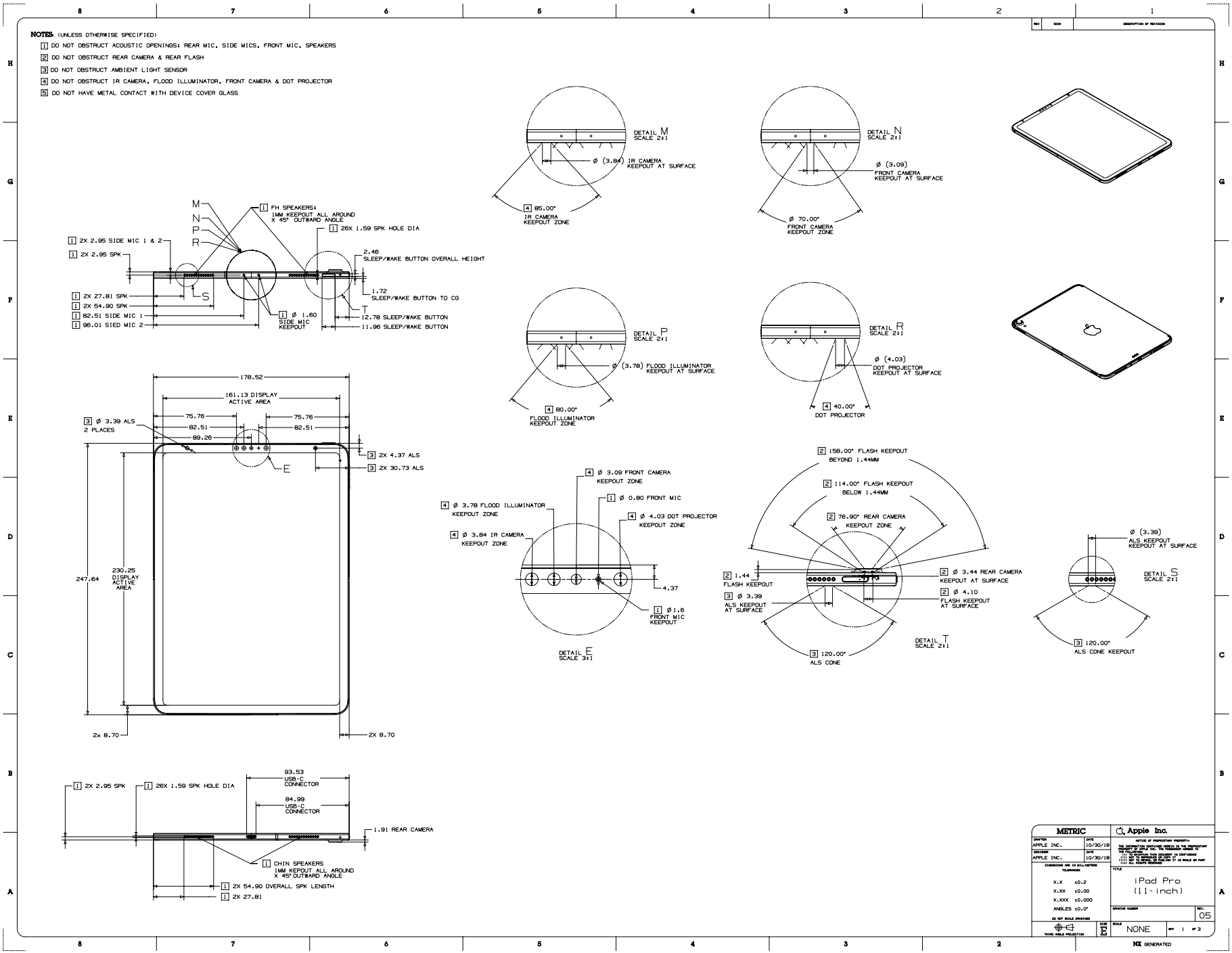

41.72 iPad Pro (11-inch) 2 of 3

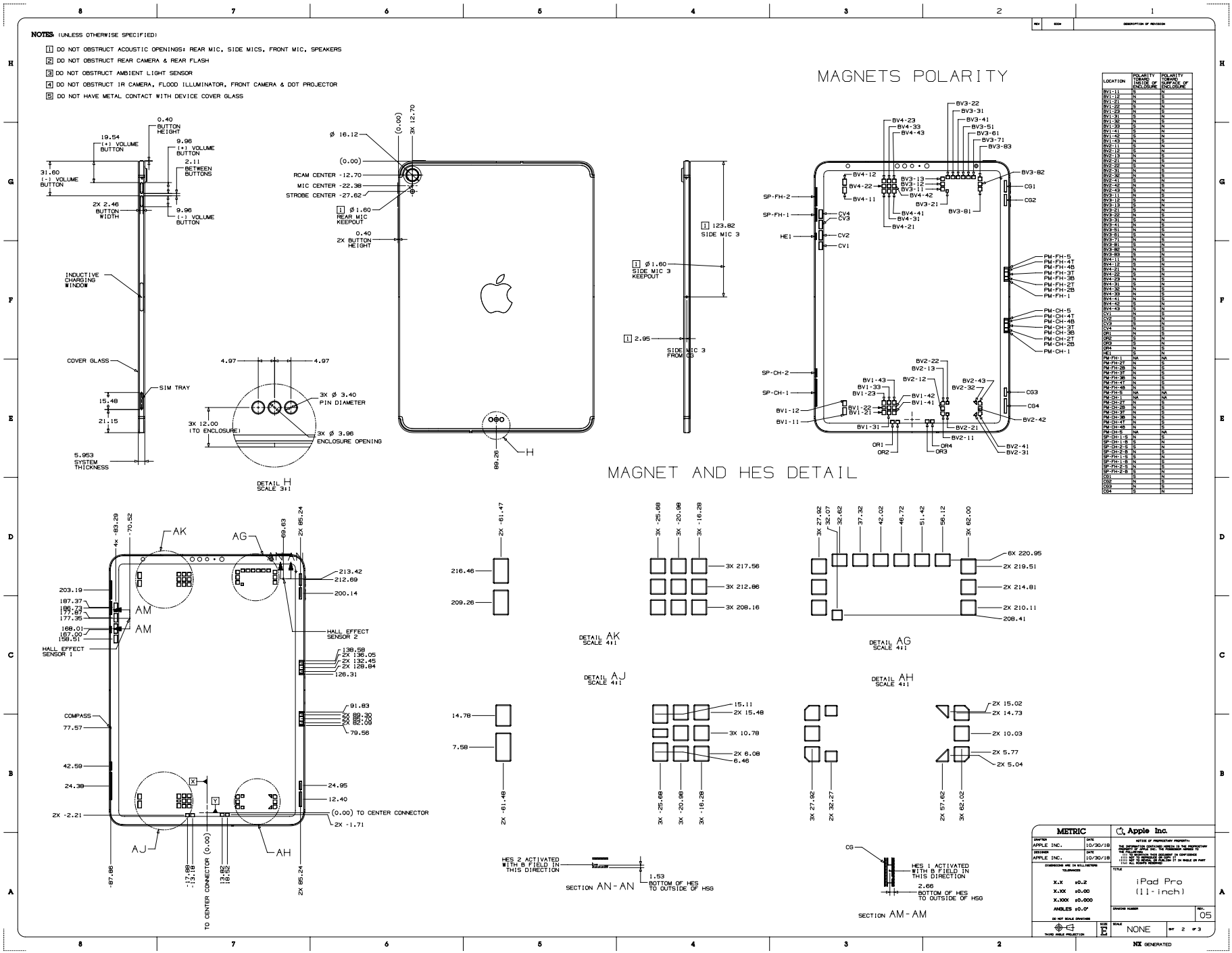

41.73 iPad Pro (11-inch) 3 of 3

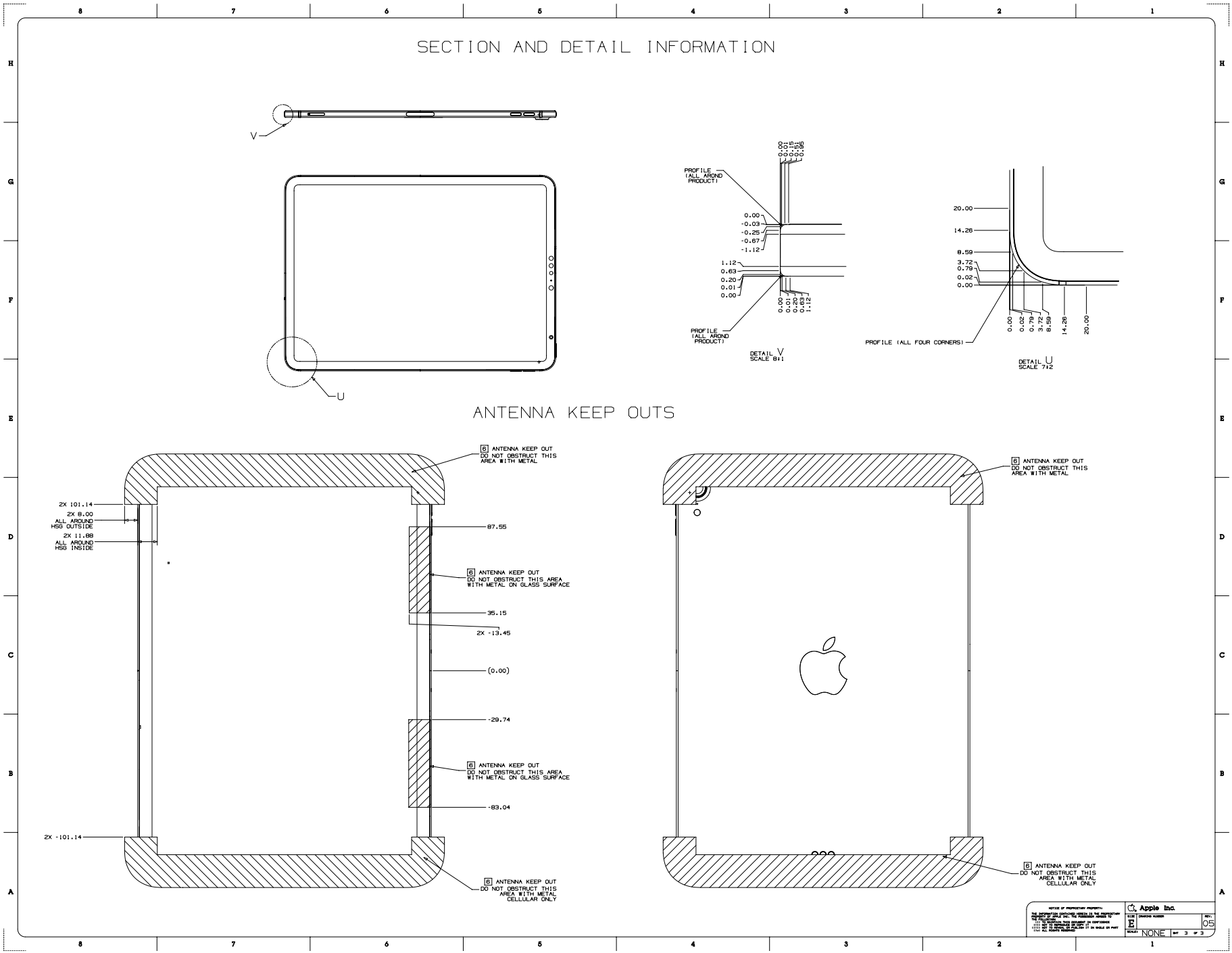

41.74 iPad Pro (12.9-inch) 2nd Generation with Wi-Fi

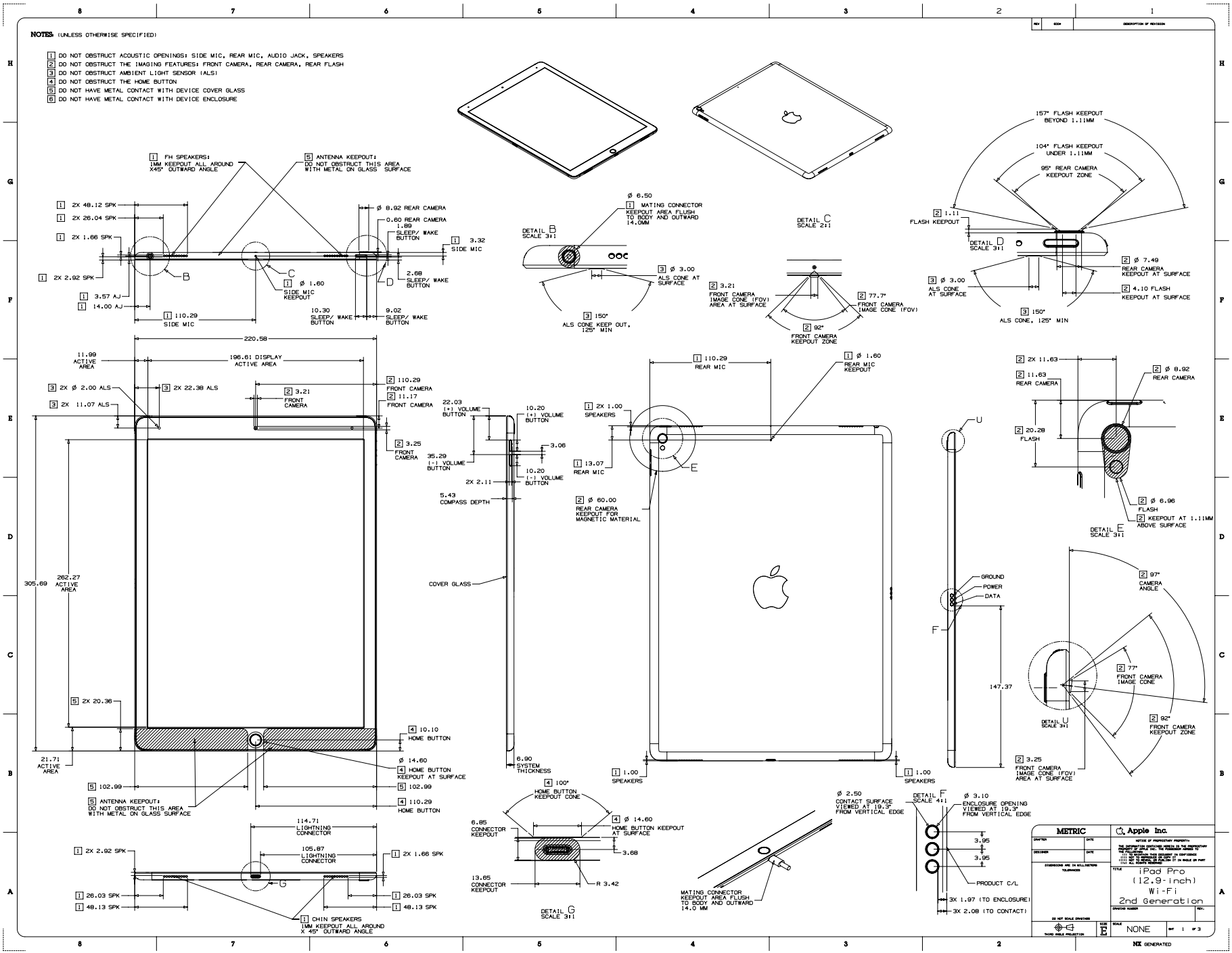

Copyright © 2021 Apple Inc. All Rights Reserved.

41.75 iPad Pro (12.9-inch) 2nd Generation with Wi-Fi + Cellular

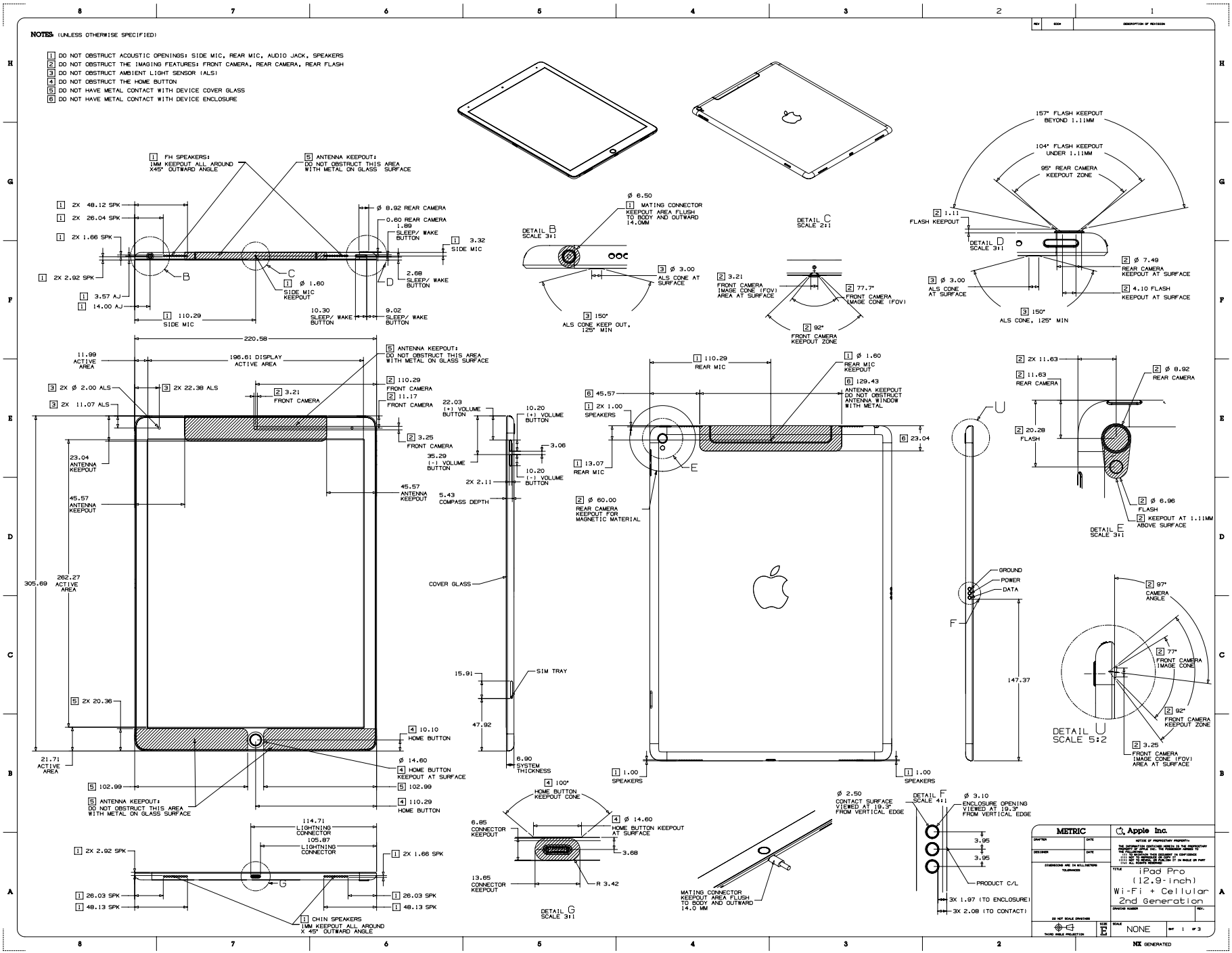

Copyright © 2021 Apple Inc. All Rights Reserved.

41.76 iPad Pro (12.9-inch) 2nd Generation Magnet/Hall Effect Sensors 1 of 2

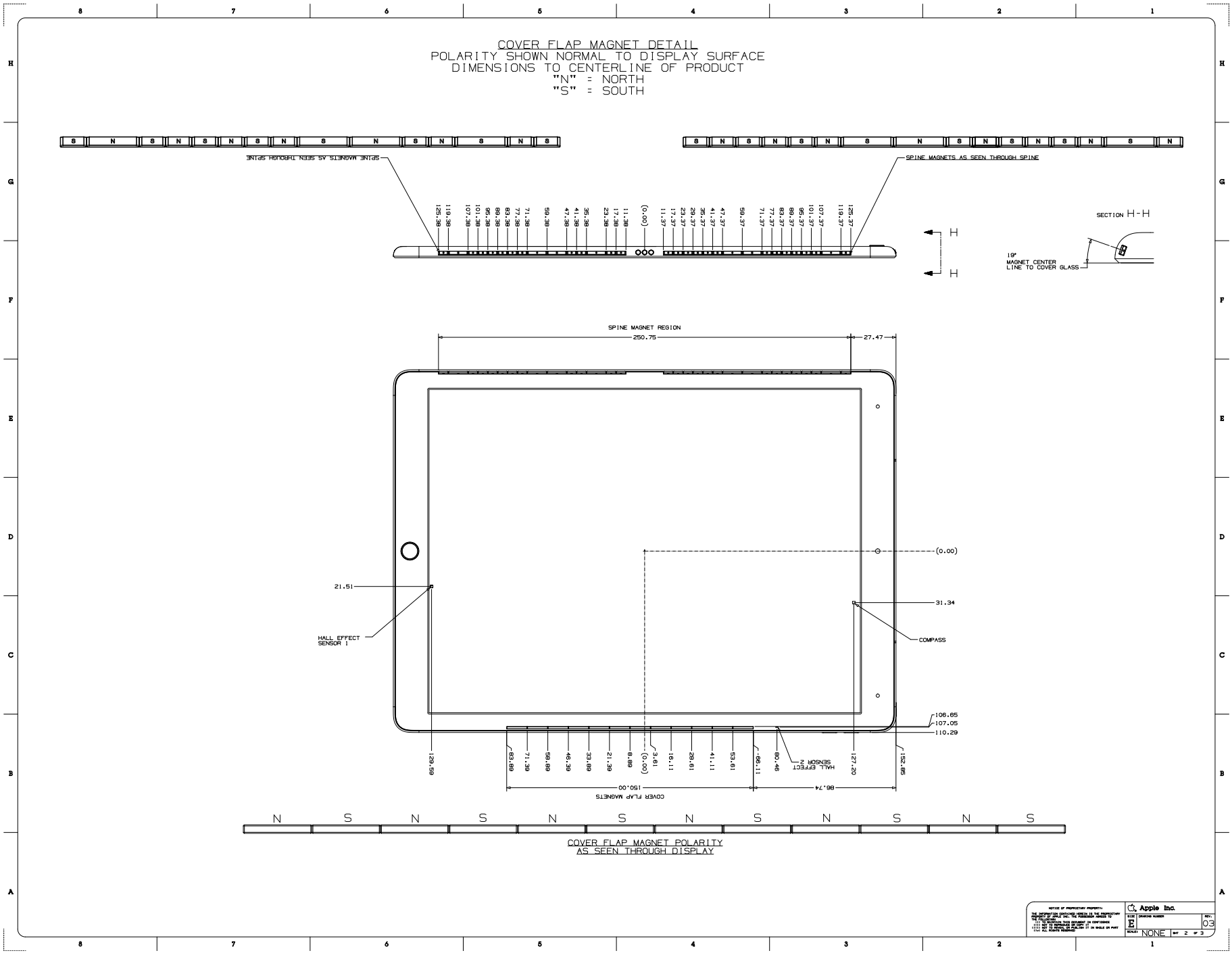

41.77 iPad Pro (12.9-inch) 2nd Generation Magnet/Hall Effect Sensors 2 of 2

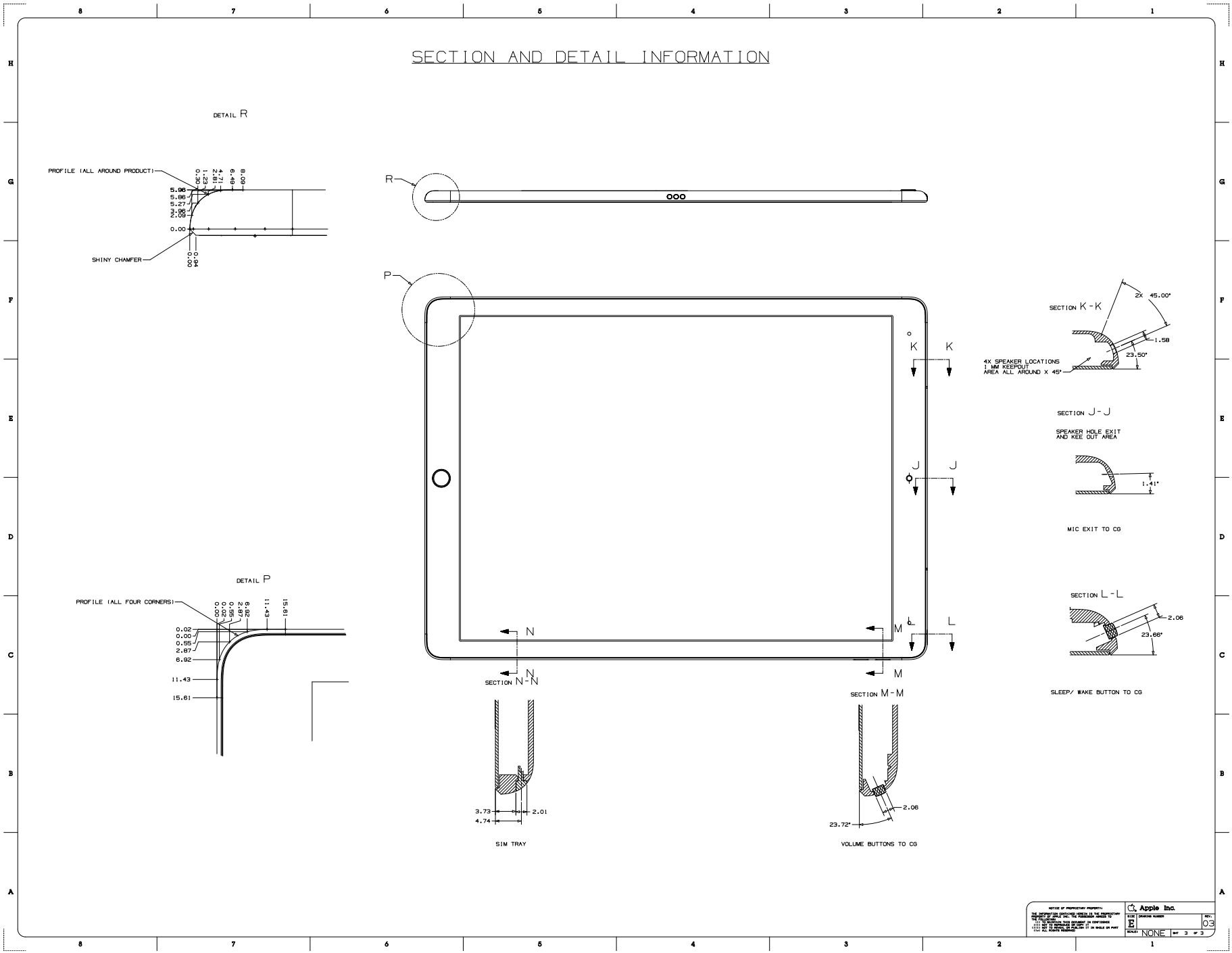

41.78 iPad Pro (10.5-inch) with Wi-Fi

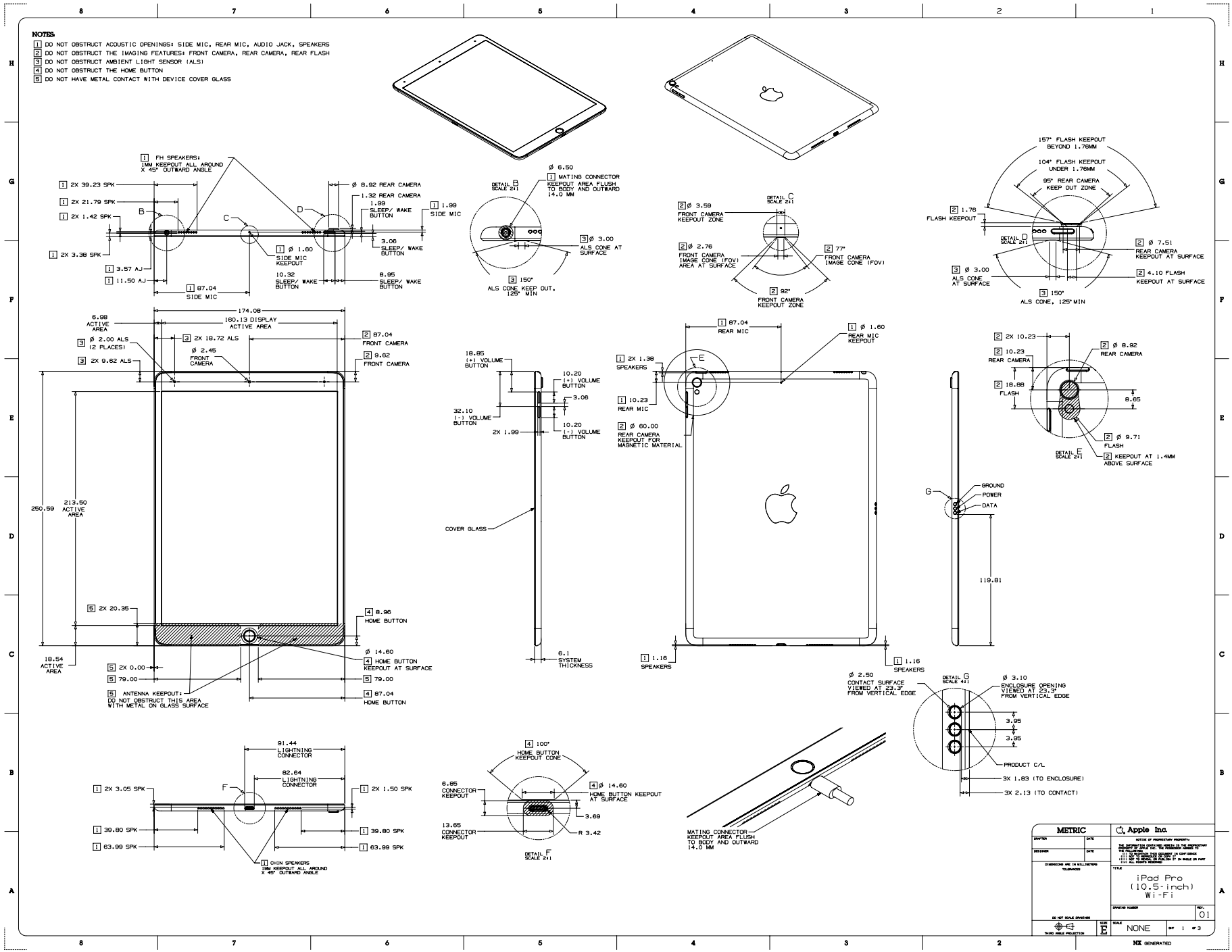

Copyright © 2021 Apple Inc. All Rights Reserved.

41.79 iPad Pro (10.5-inch) with Wi-Fi + Cellular

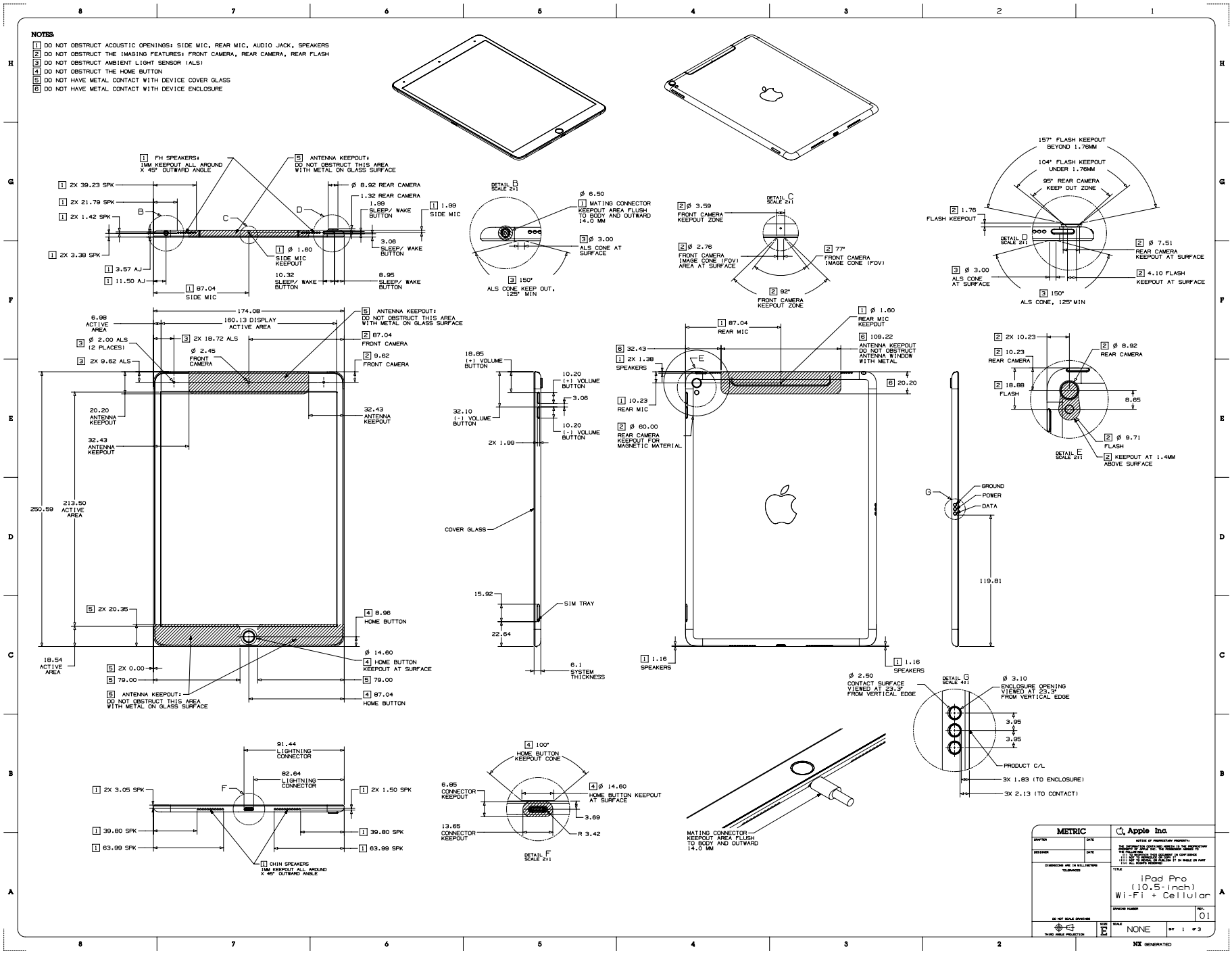

Copyright © 2021 Apple Inc. All Rights Reserved.

41.80 iPad Pro (10.5-inch) Magnet/Hall Effect Sensors 1 of 2

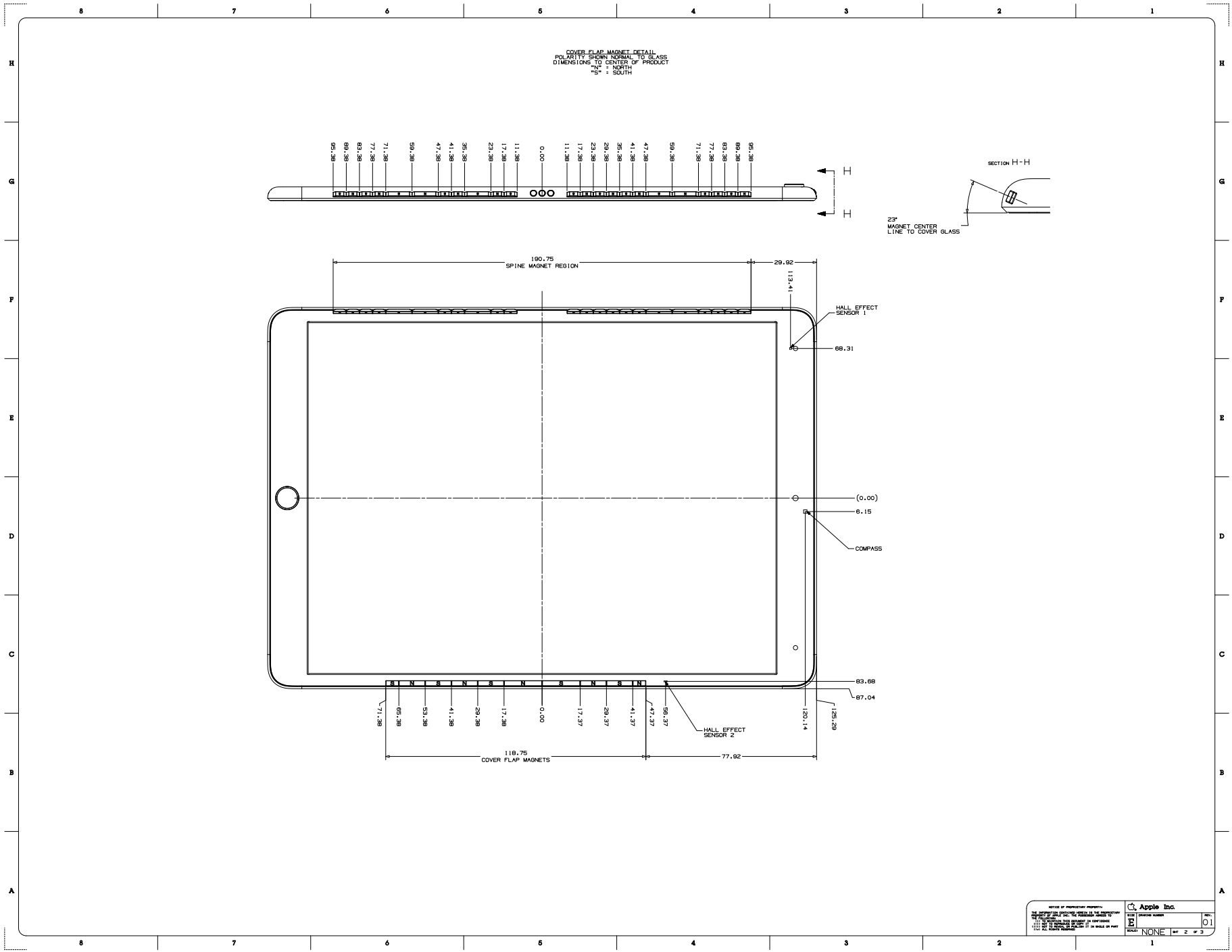

41.81 iPad Pro (10.5-inch) Magnet/Hall Effect Sensors 2 of 2

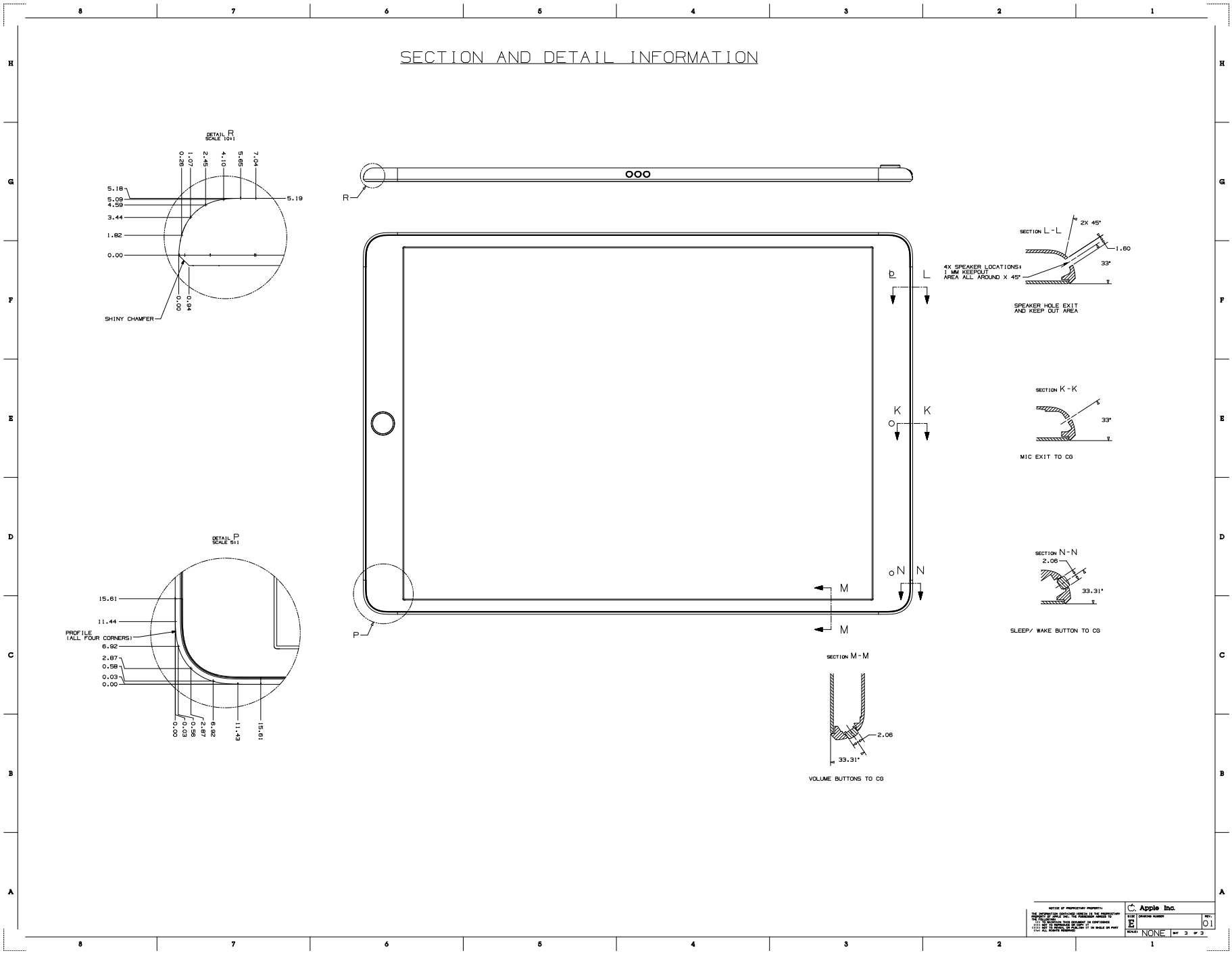

41.82 iPad (5th and 6th generation) with Wi-Fi + Cellular

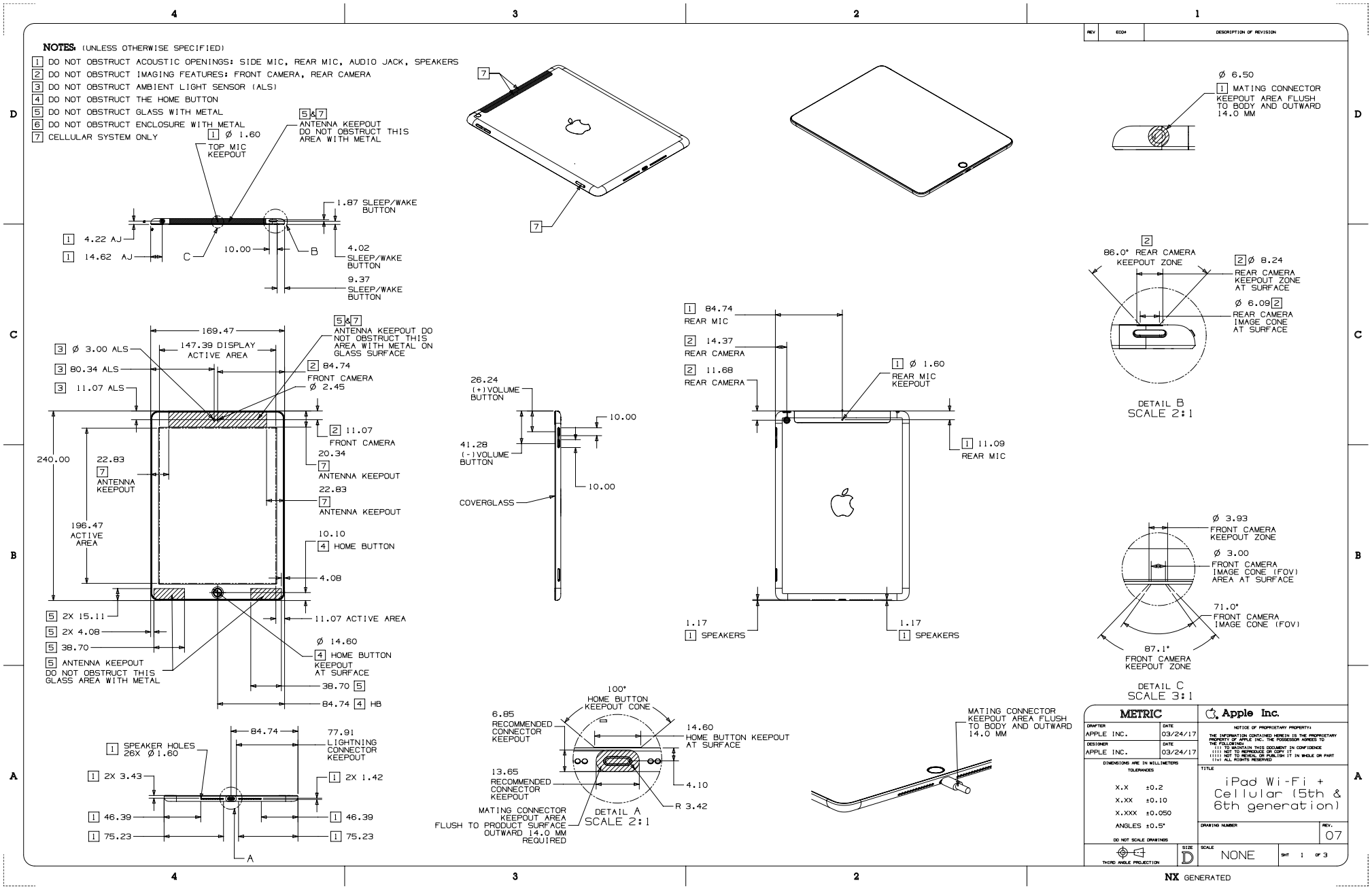

41.83 iPad (5th and 6th generation) Magnet/Hall Effect Sensors 1 of 2

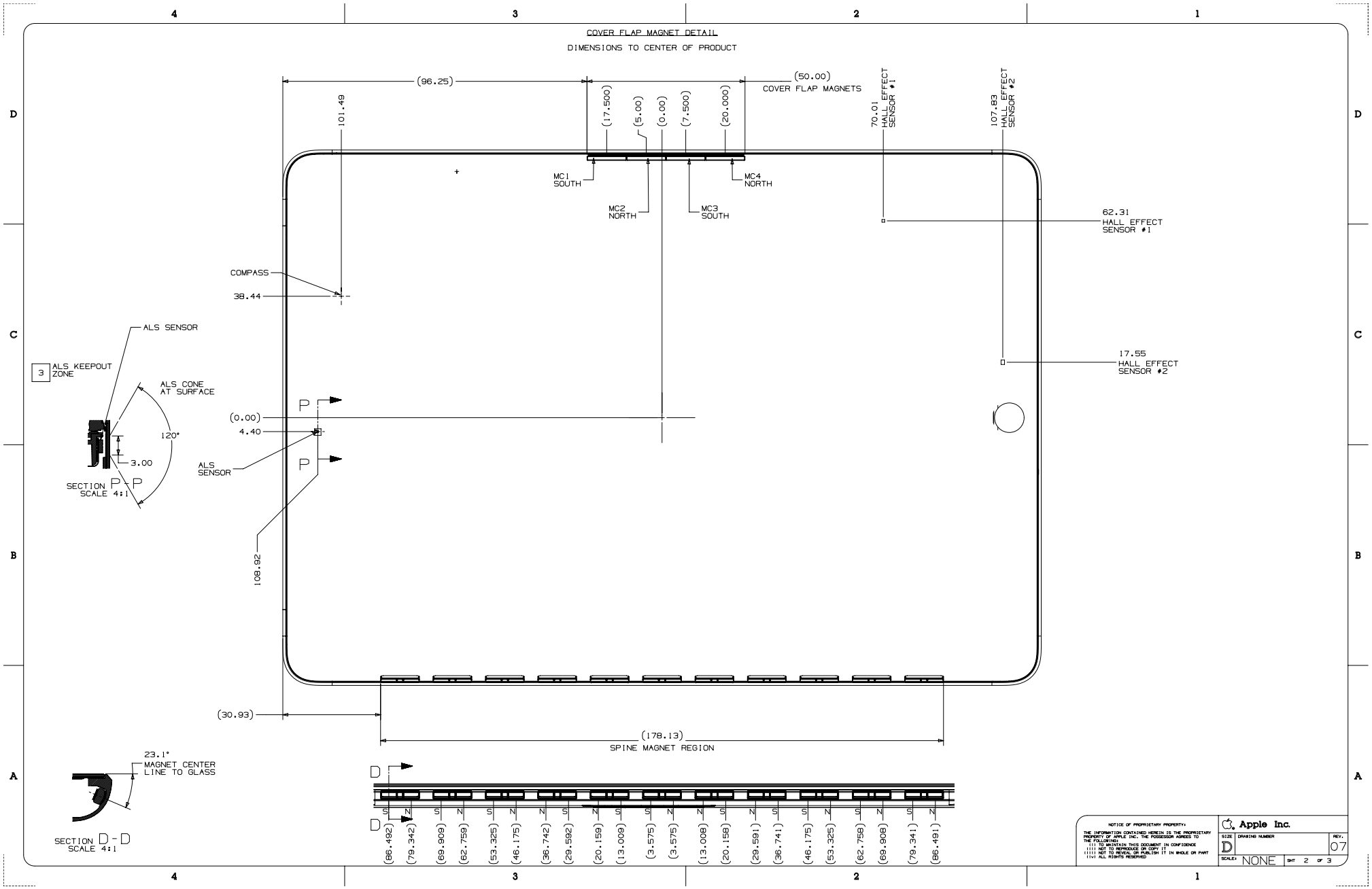

41.84 iPad (5th and 6th generation) Magnet/Hall Effect Sensors 2 of 2

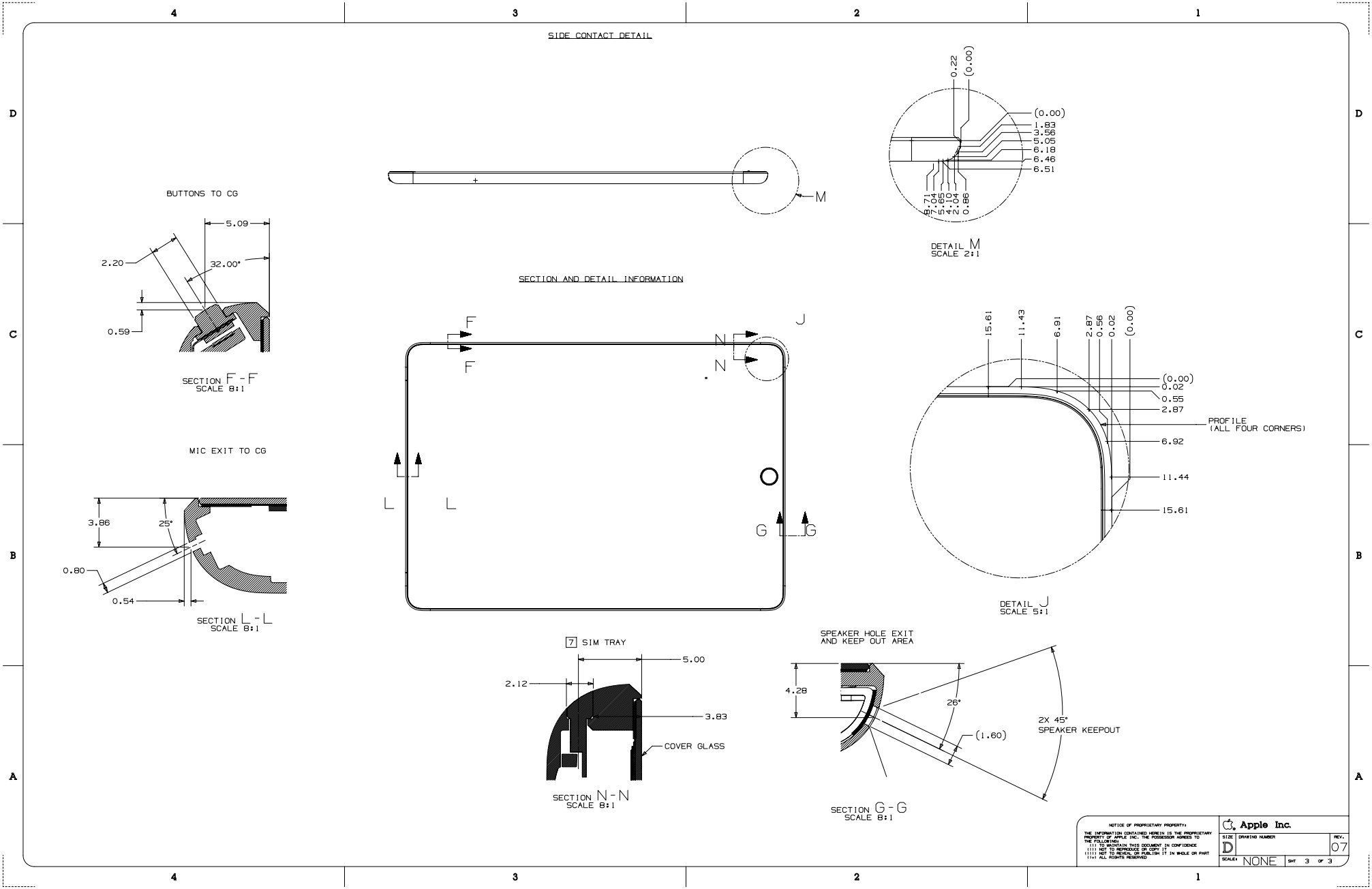

41.85 iPad Pro (9.7-inch) with Wi-Fi

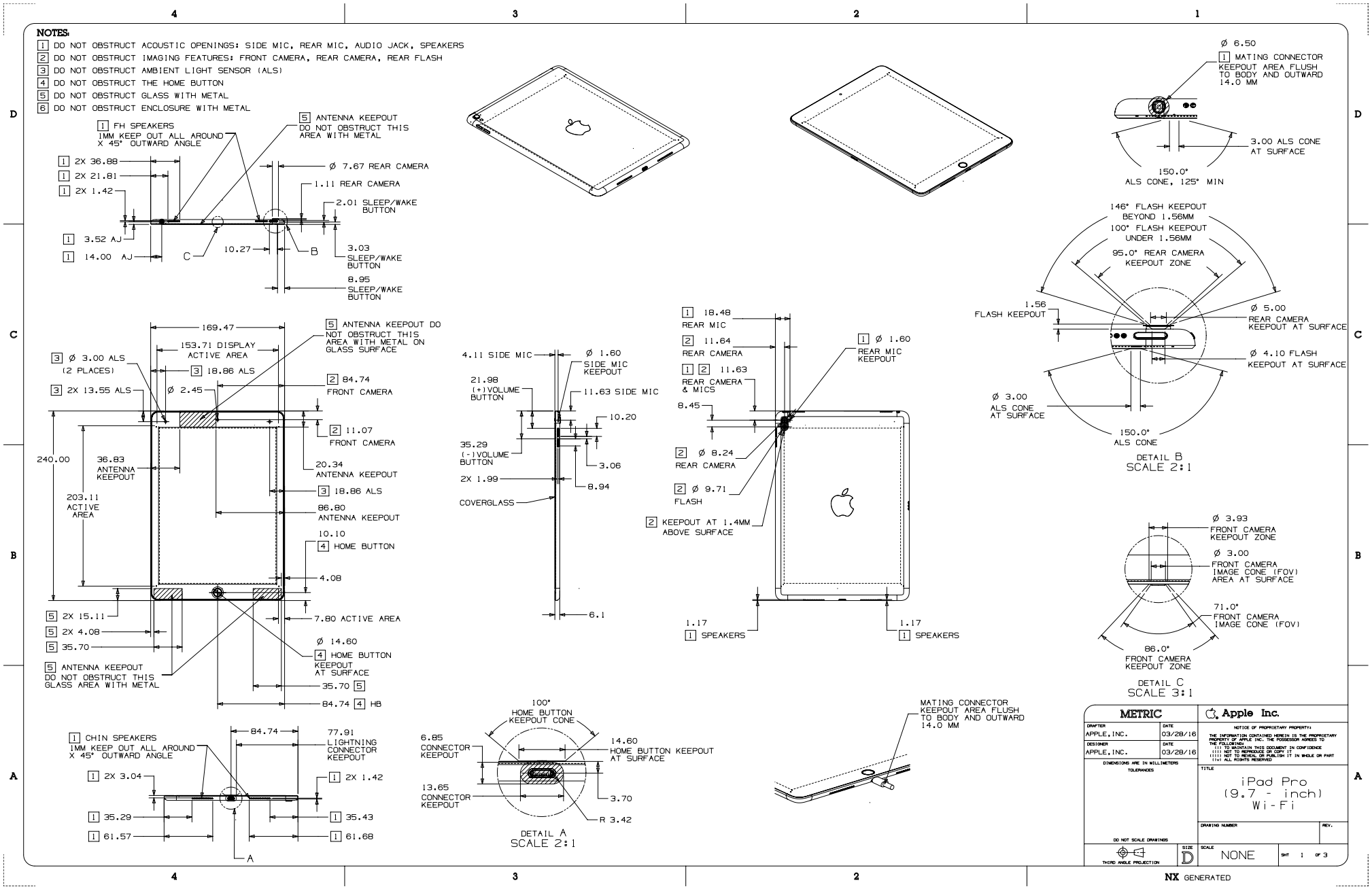

41.86 iPad Pro (9.7-inch) with Wi-Fi + Cellular

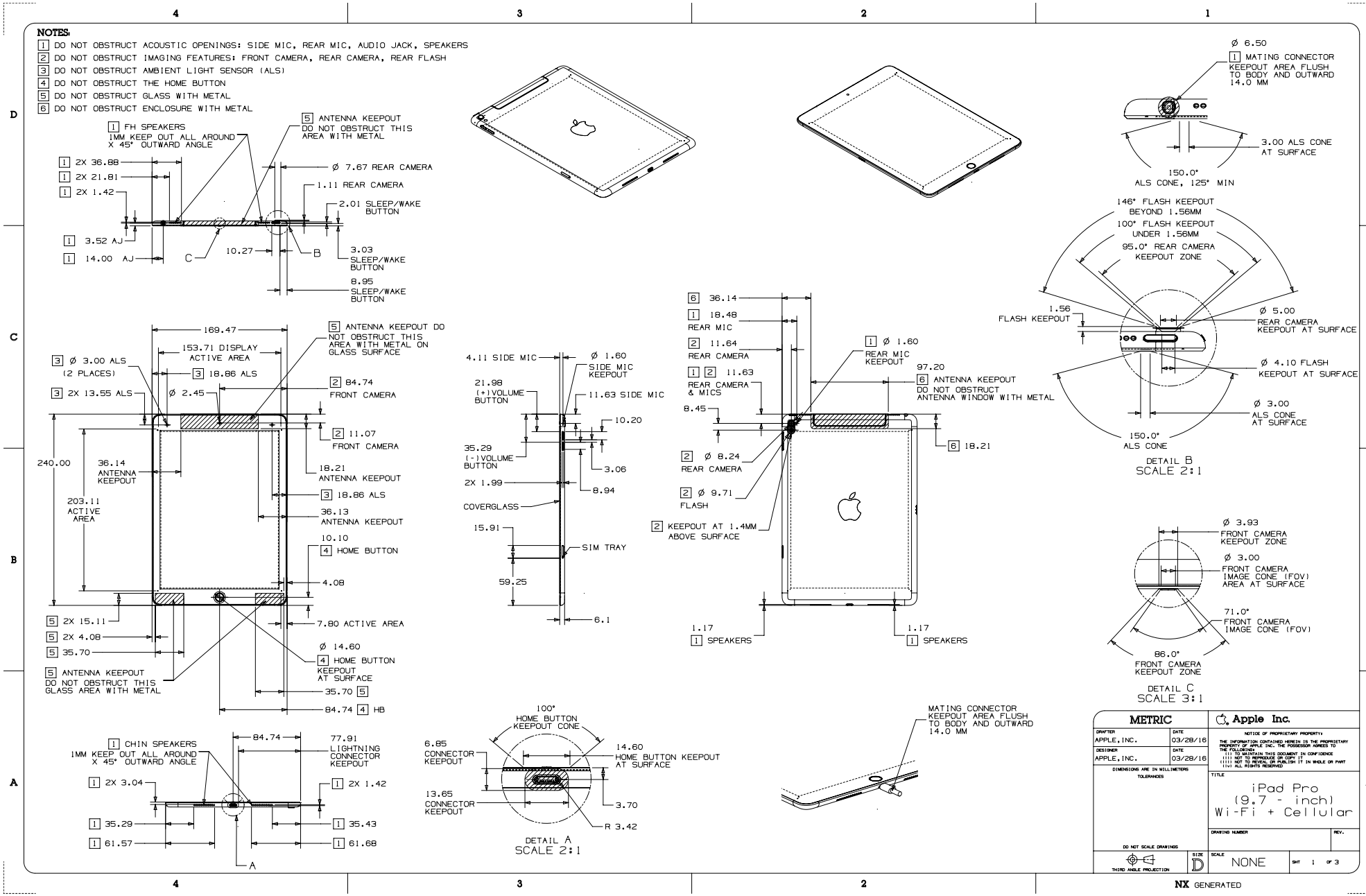

41.87 iPad Pro (9.7-inch) Magnet/Hall Effect Sensors 1 of 2

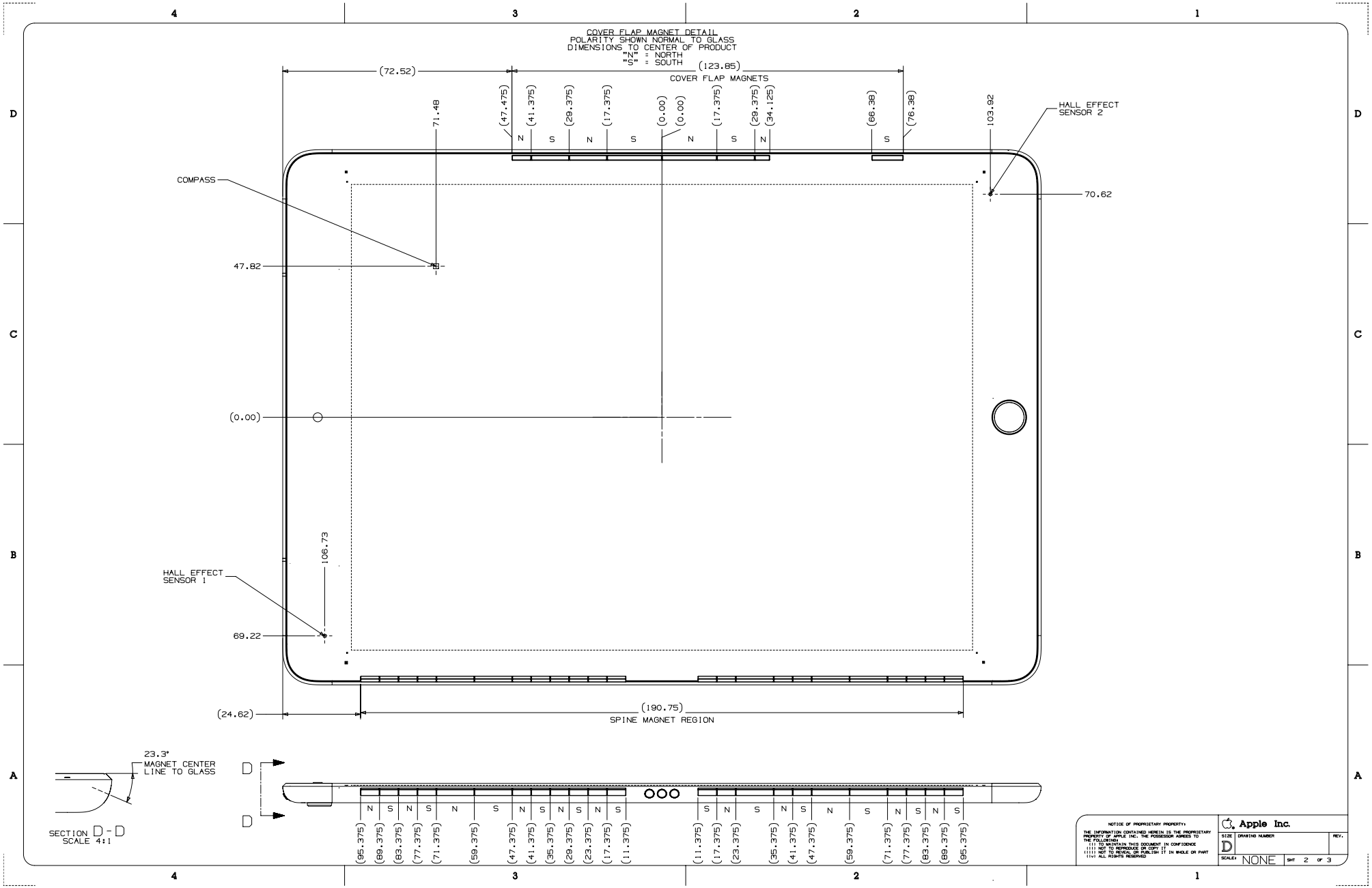

41.88 iPad Pro (9.7-inch) Magnet/Hall Effect Sensors 2 of 2

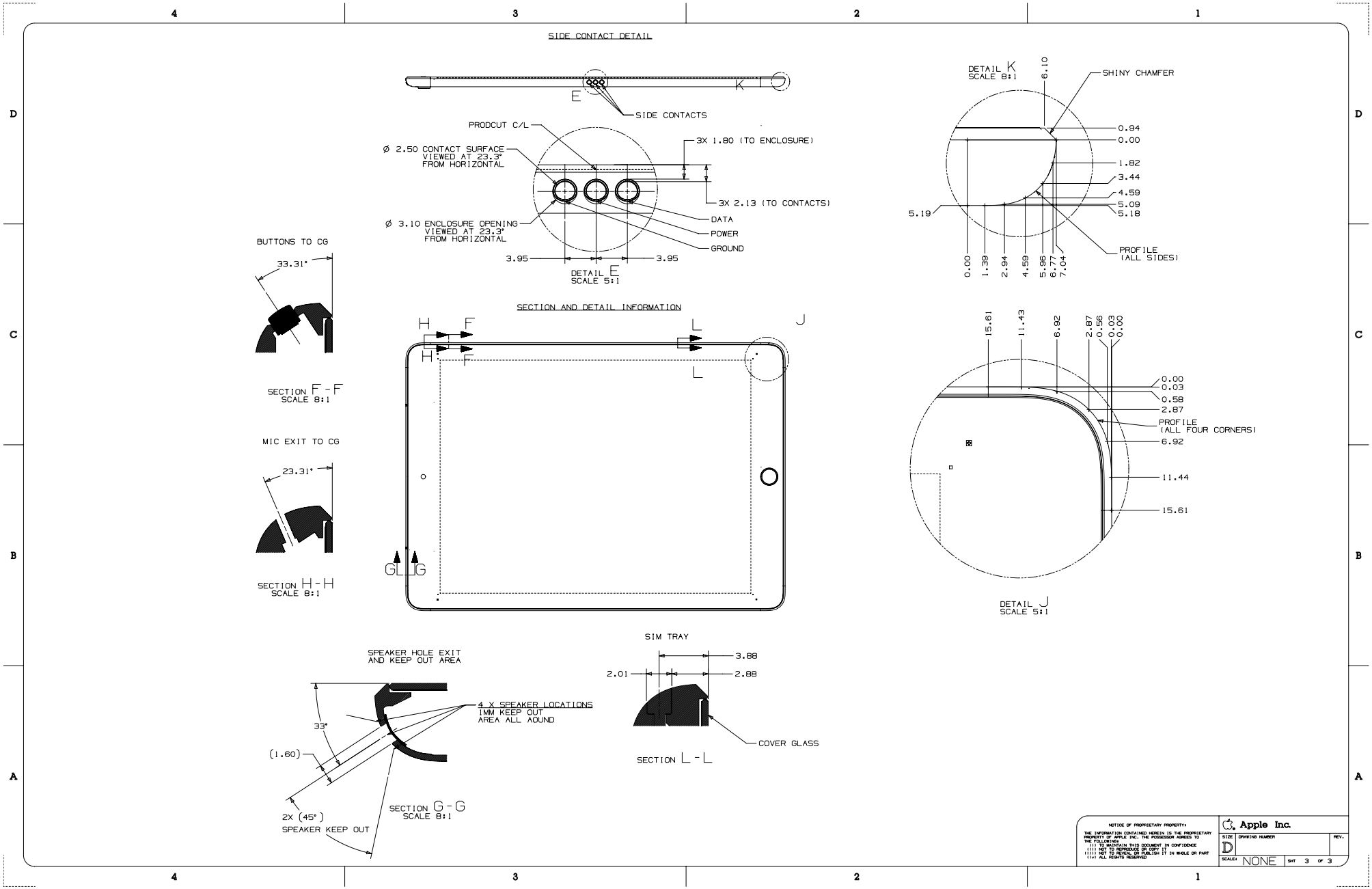

41.89 iPad Pro (12.9-inch) 1st Generation with Wi-Fi

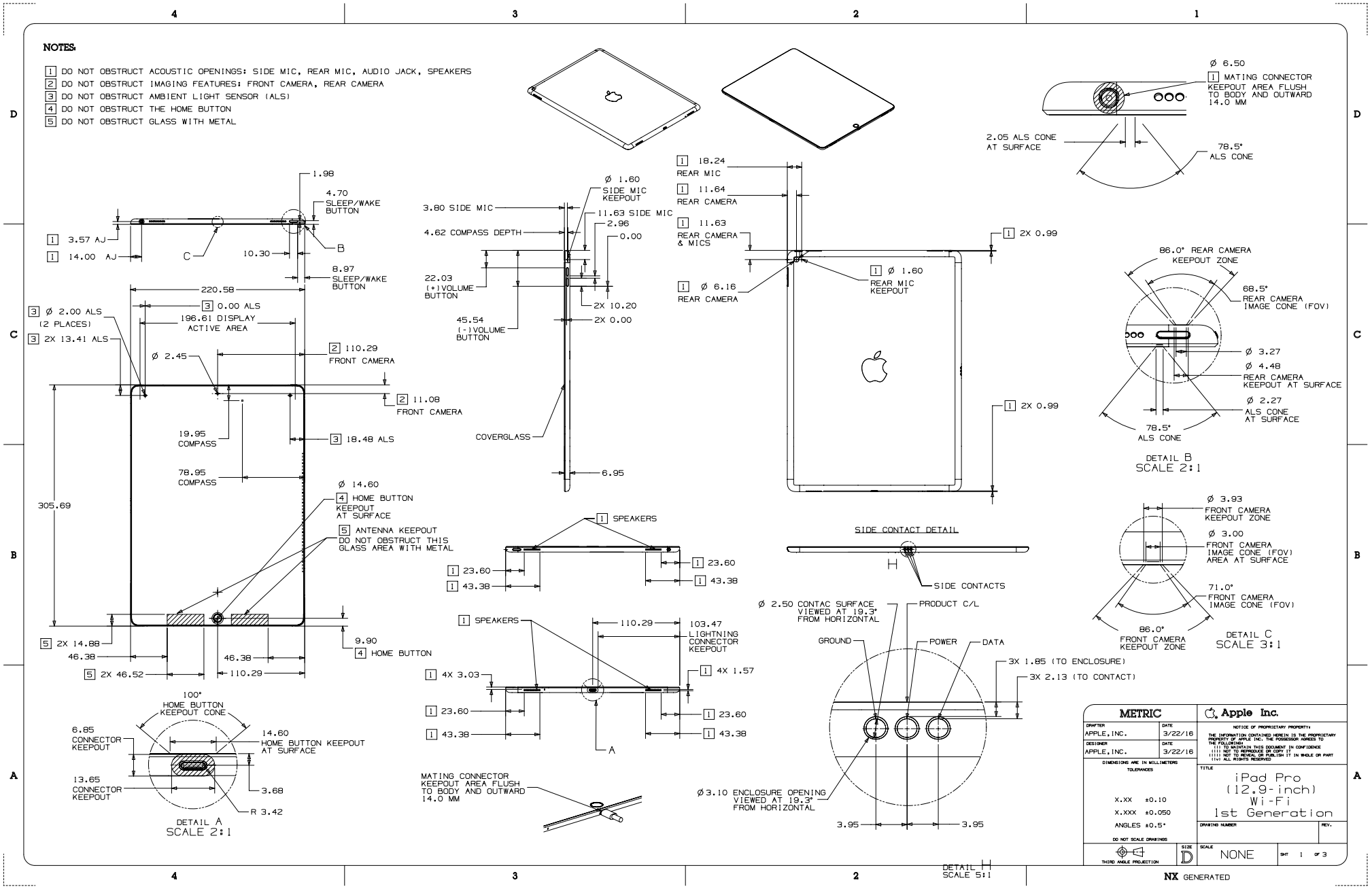

41.90 iPad Pro (12.9-inch) 1st Generation with Wi-Fi + Cellular

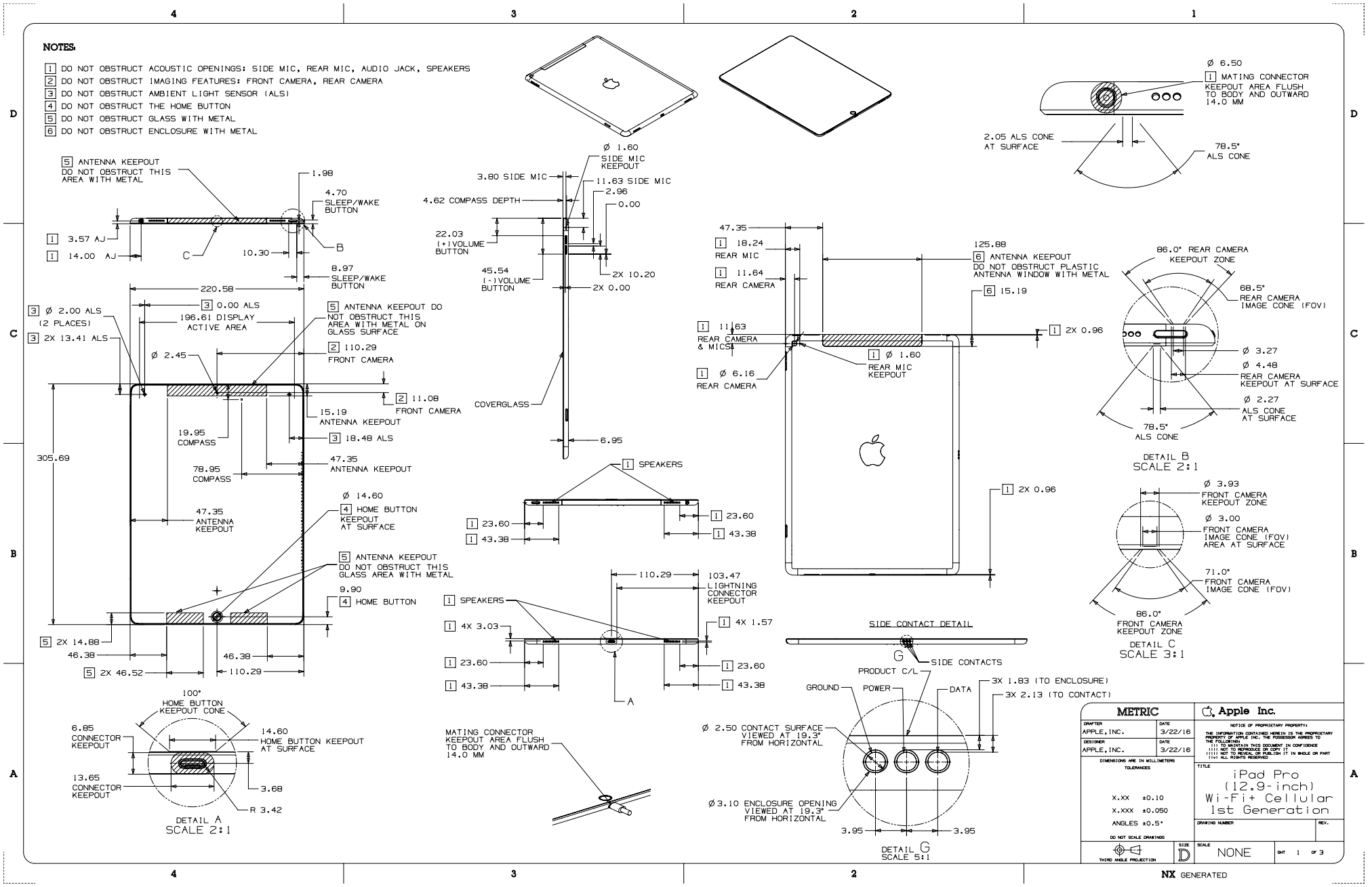

41.91 iPad Pro (12.9-inch) 1st Generation Magnet/Hall Effect Sensors 1 of 2

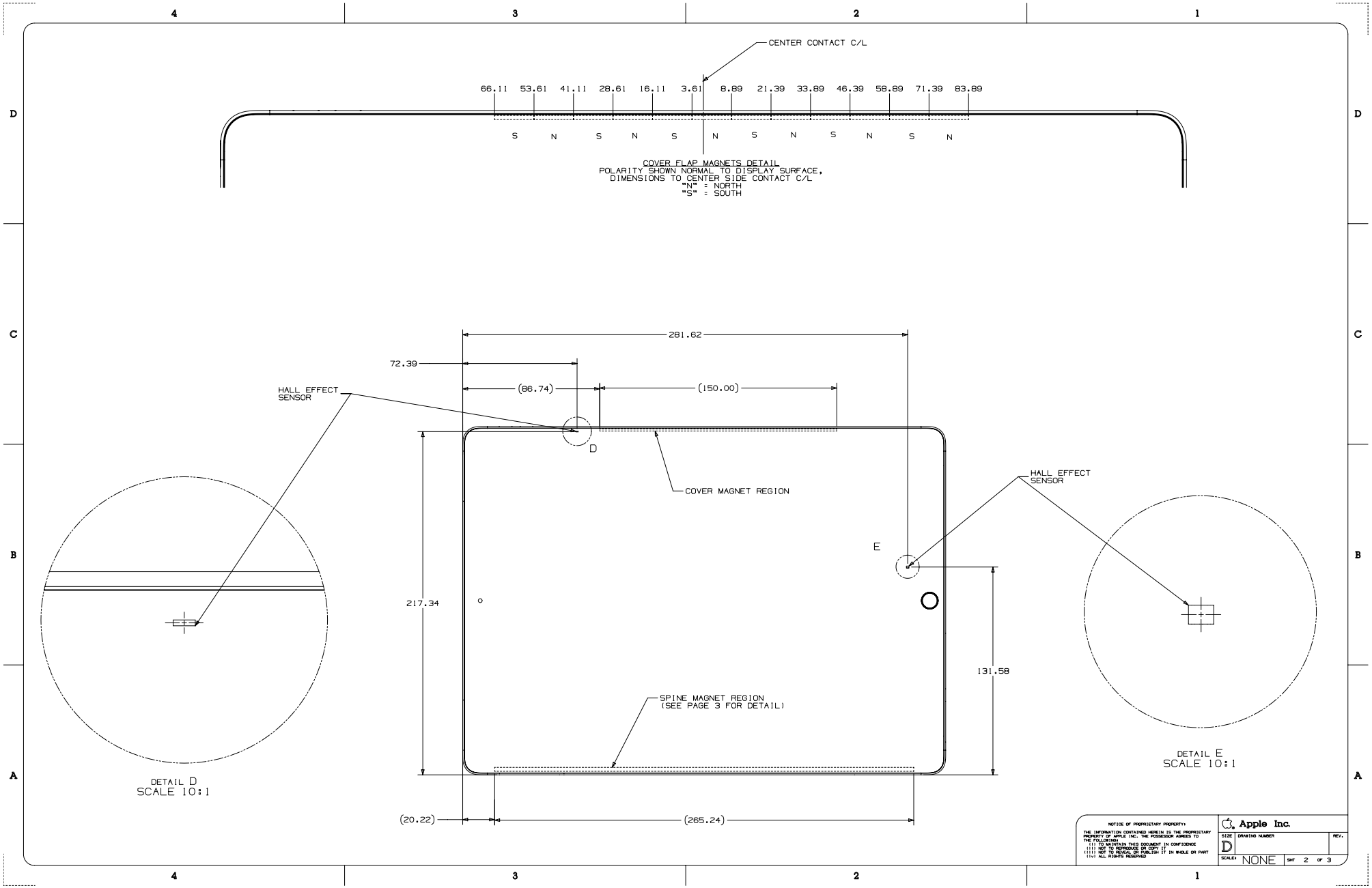

41.92 iPad Pro (12.9-inch) 1st Generation Magnet/Hall Effect Sensors 2 of 2

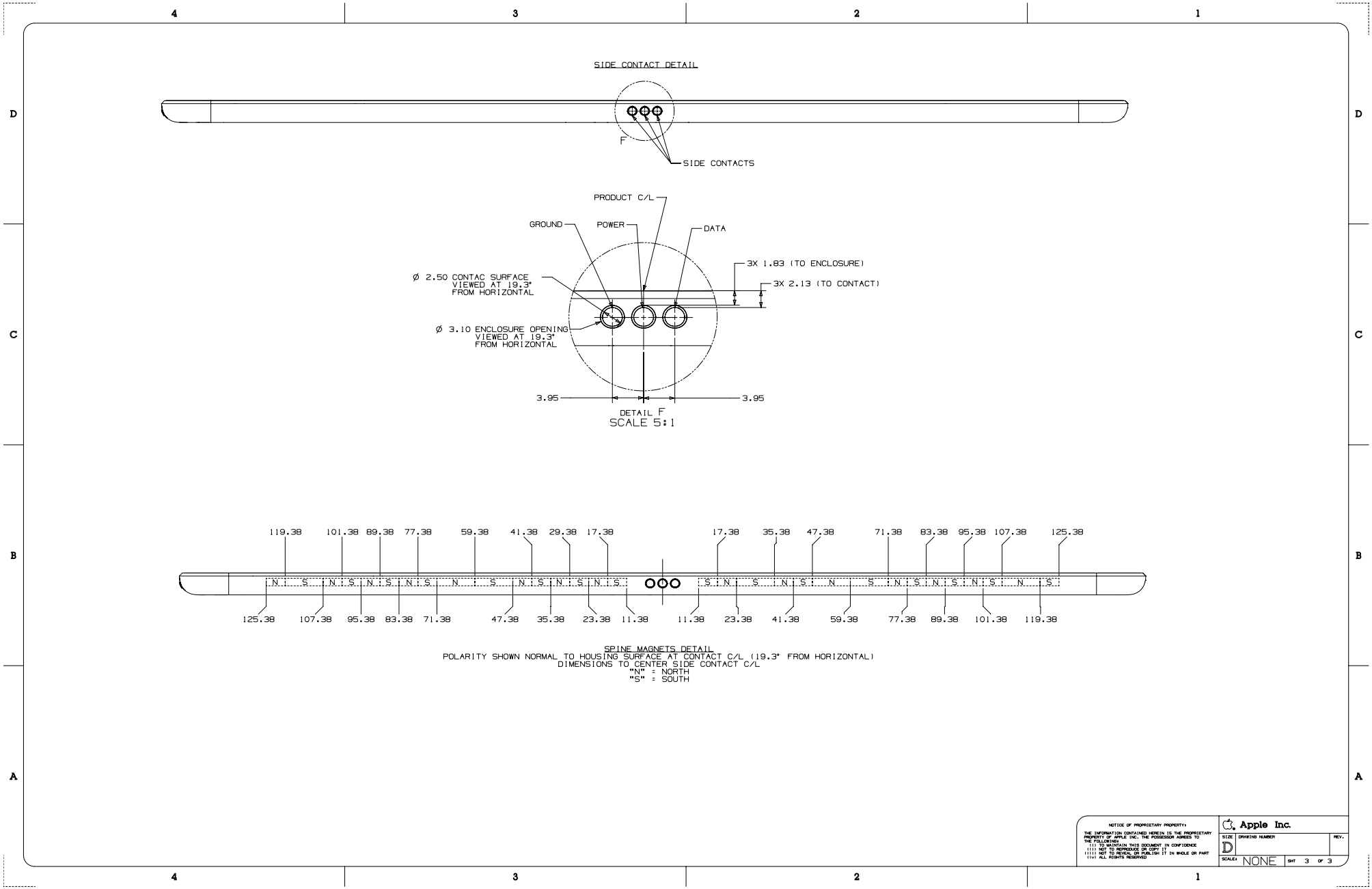

41.93 iPad mini 4 with Wi-Fi

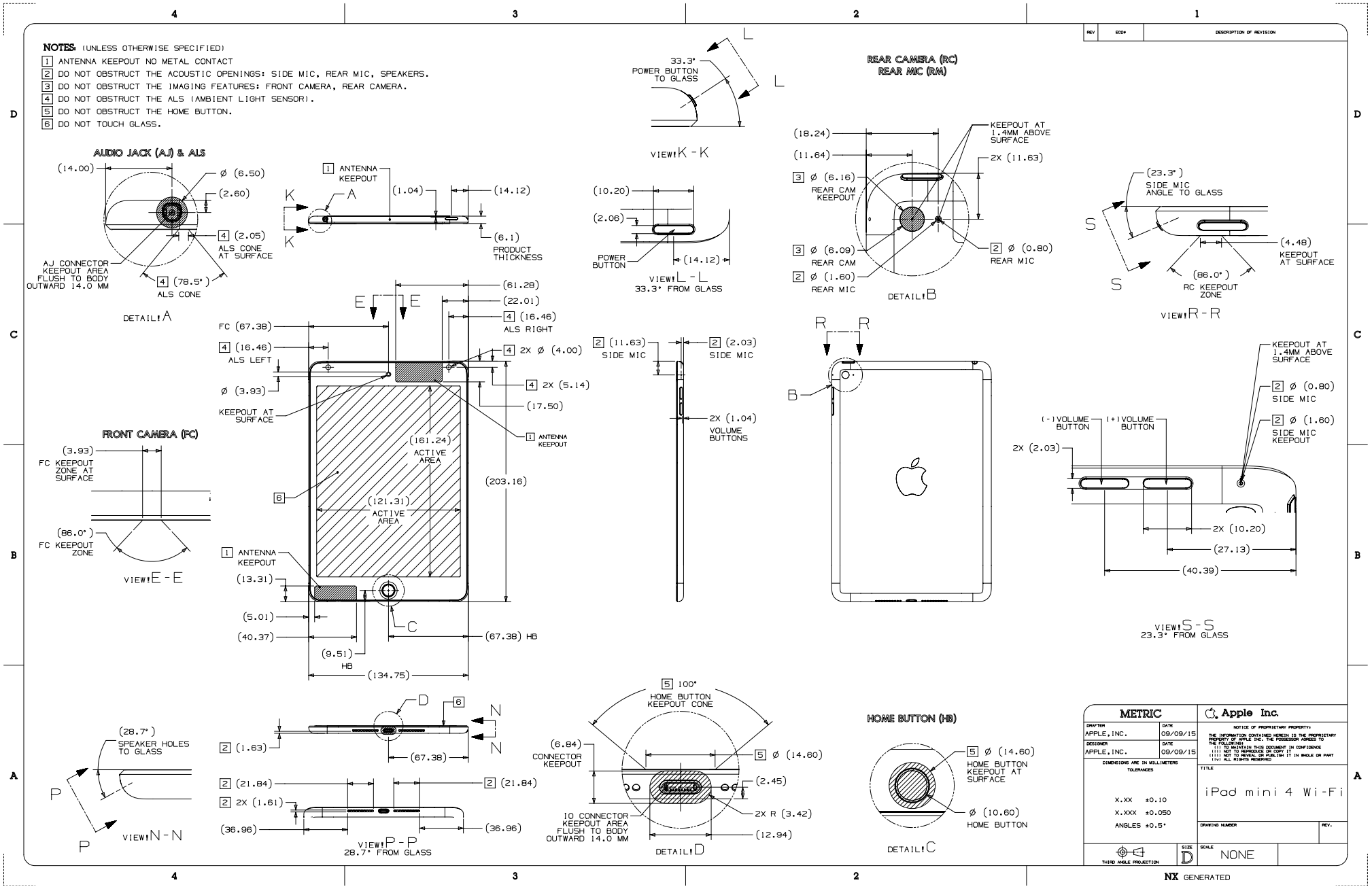

41.94 iPad mini 4 with Wi-Fi + Cellular

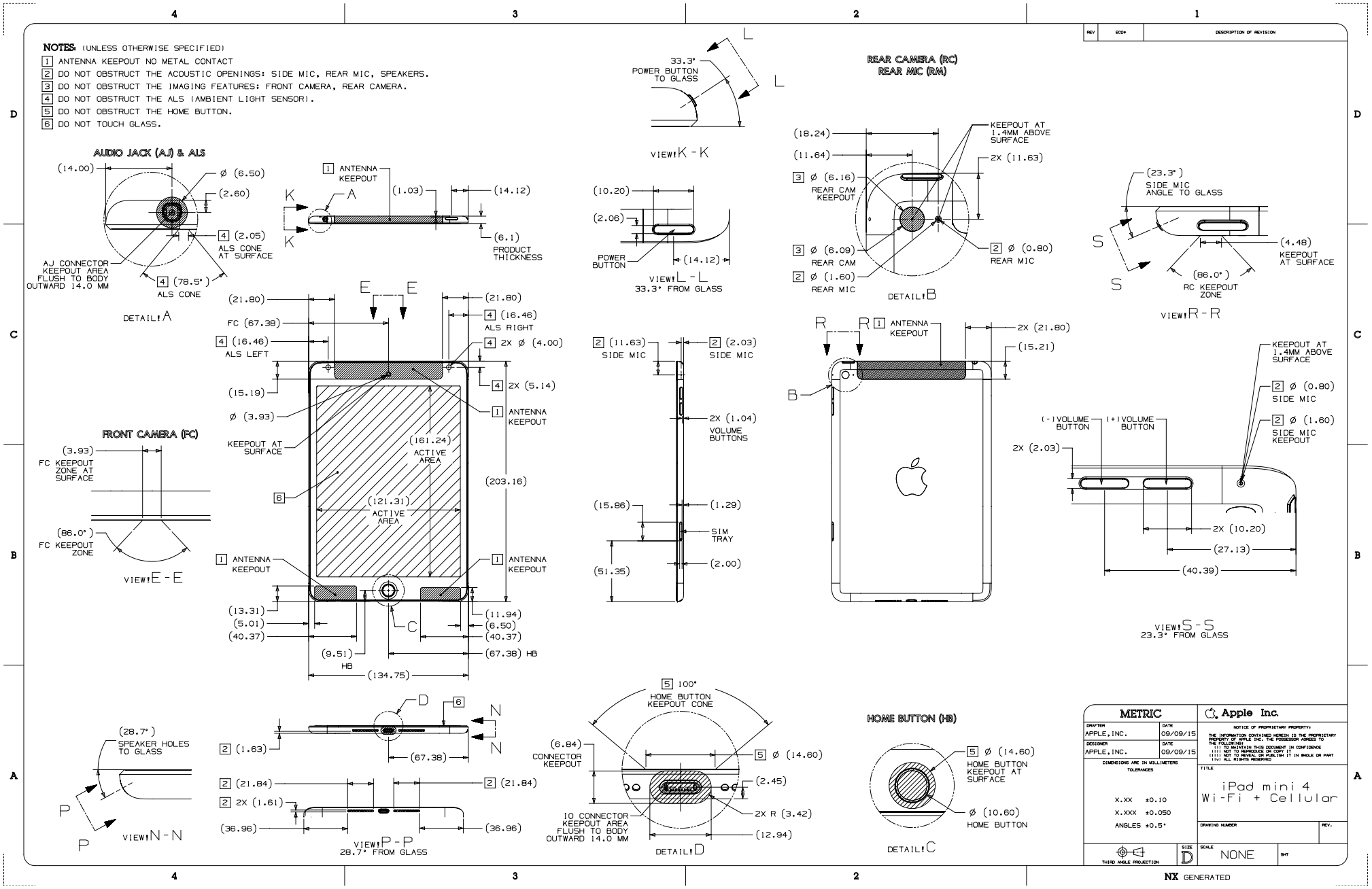

41.95 iPad mini 4 Magnet/Hall Effect Sensors

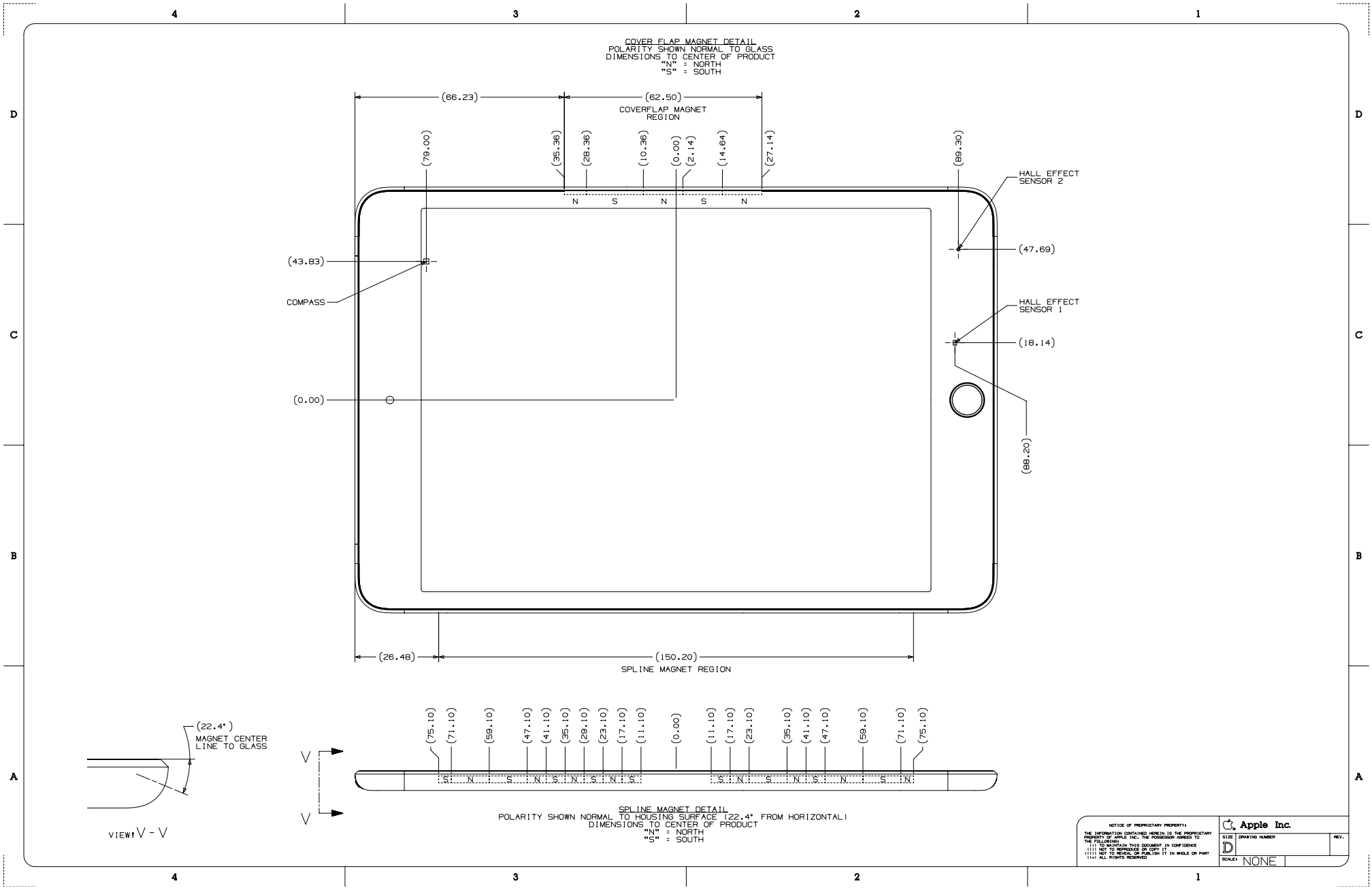

41.96 iPad Air 2 with Wi-Fi

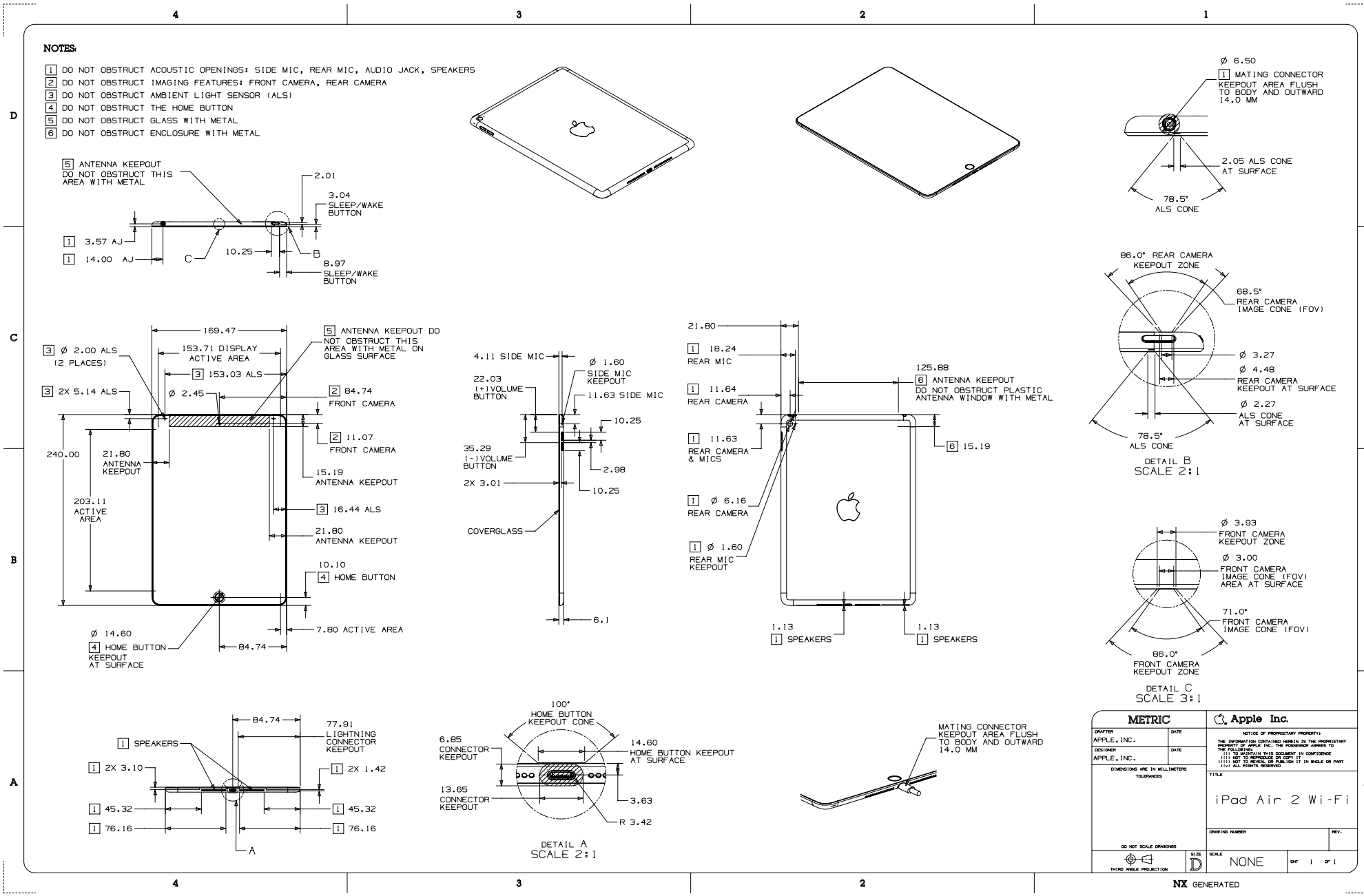

41.97 iPad Air 2 with Wi-Fi + Cellular

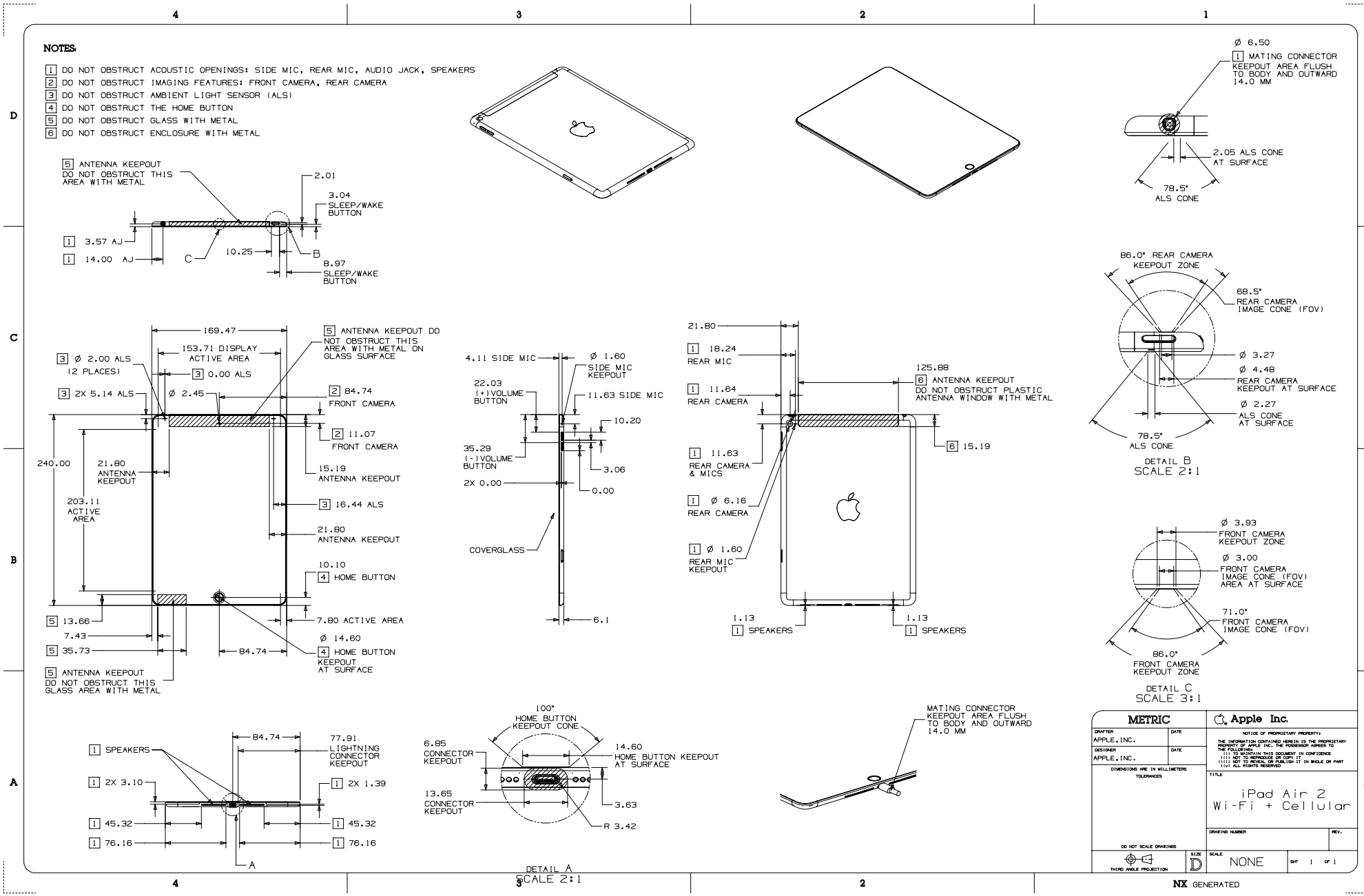

41.98 iPad mini 2 & iPad mini 3 with Wi-Fi

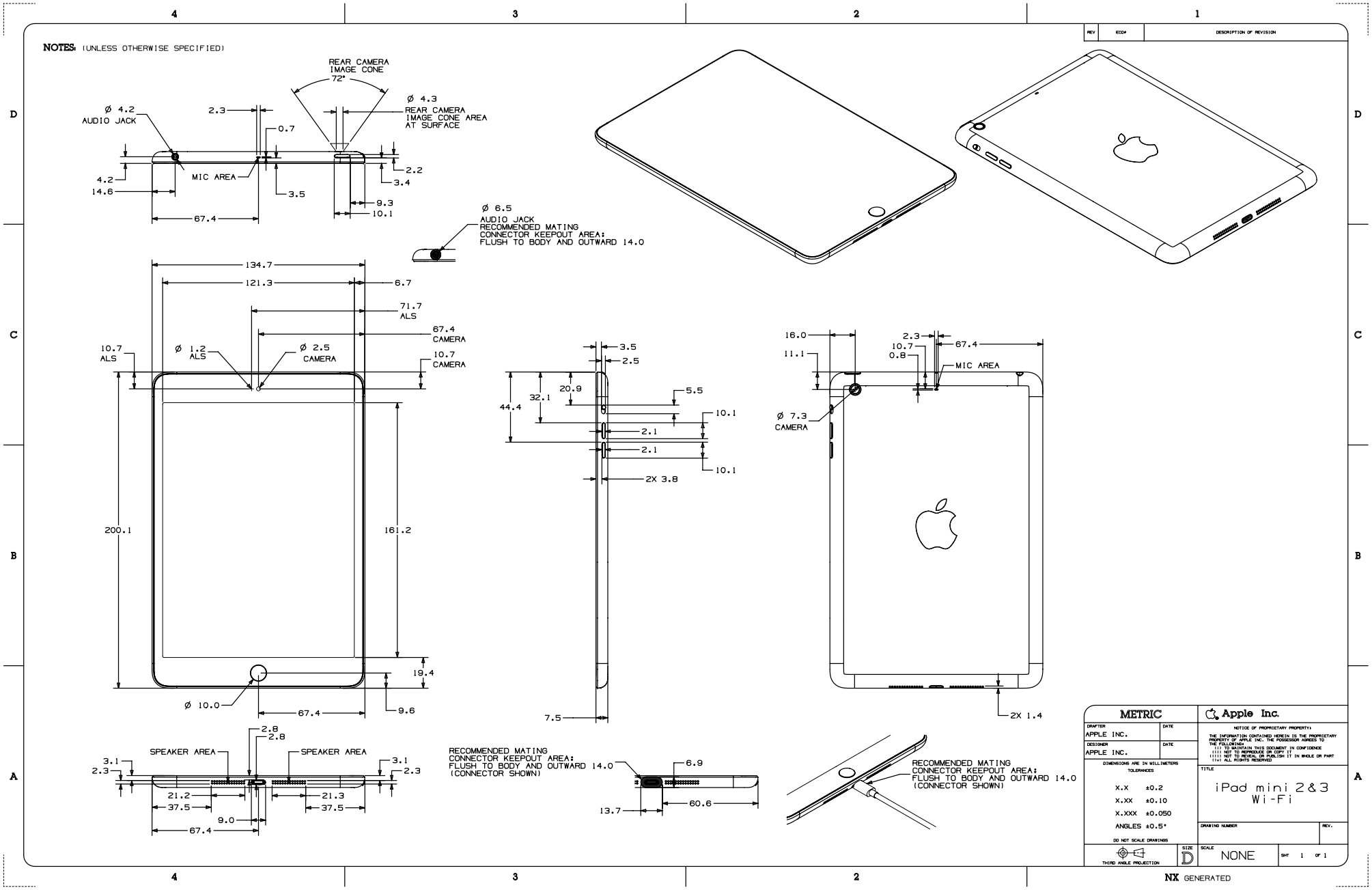

41.99 iPad mini 2 & iPad mini 3 with Wi-Fi + Cellular

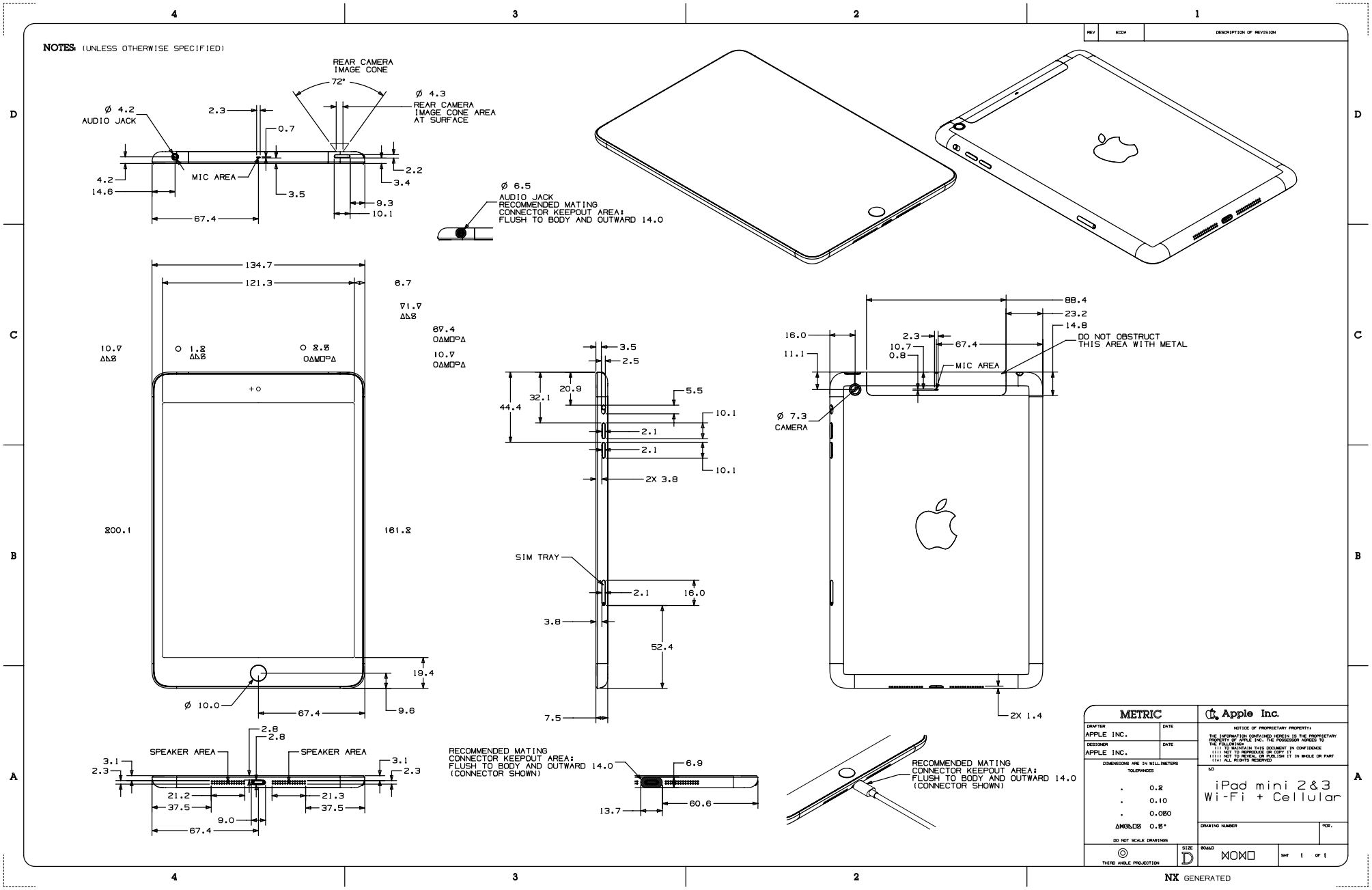

41.100 iPad Air with Wi-Fi

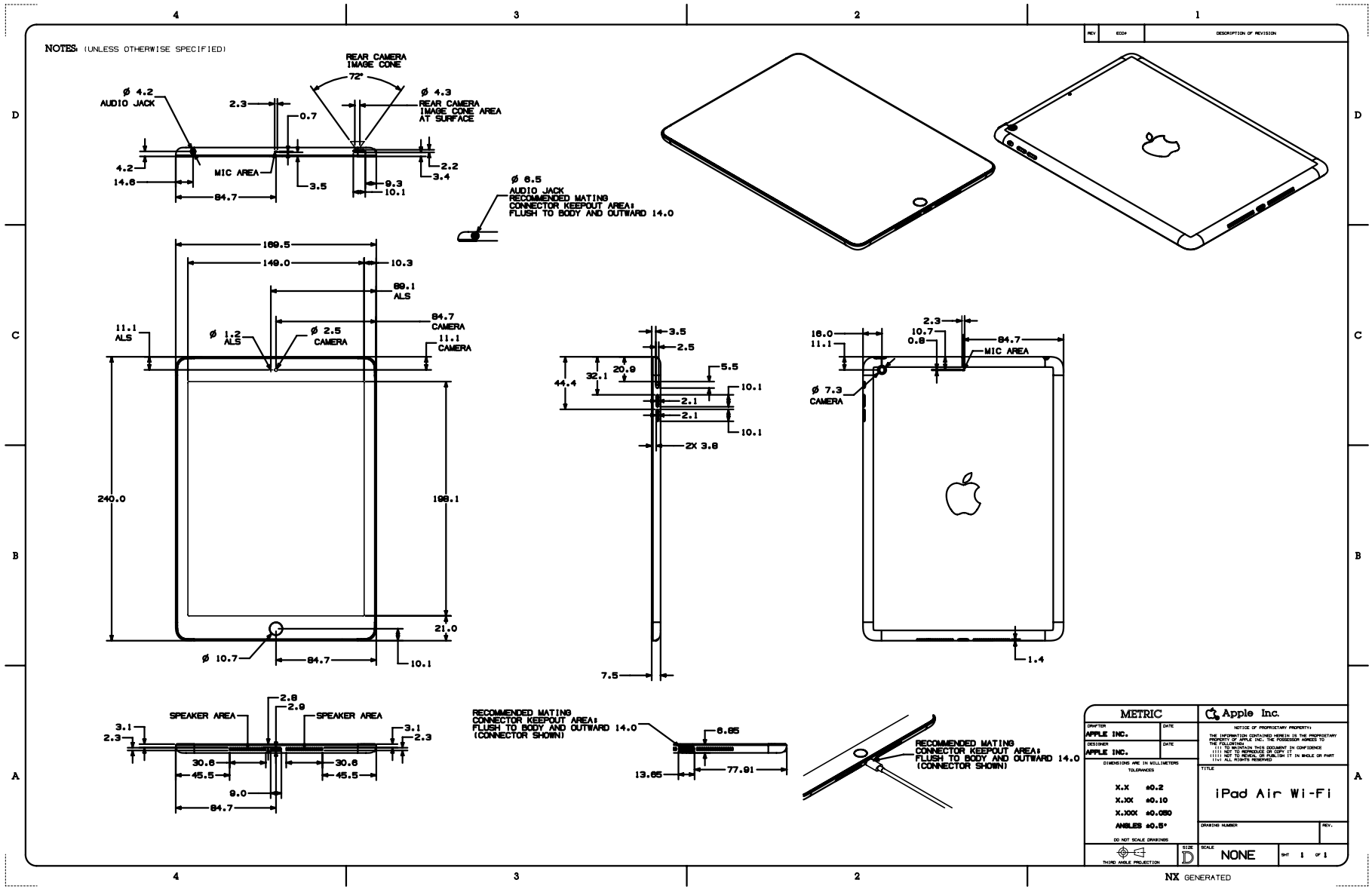

41.101 iPad Air with Wi-Fi + Cellular

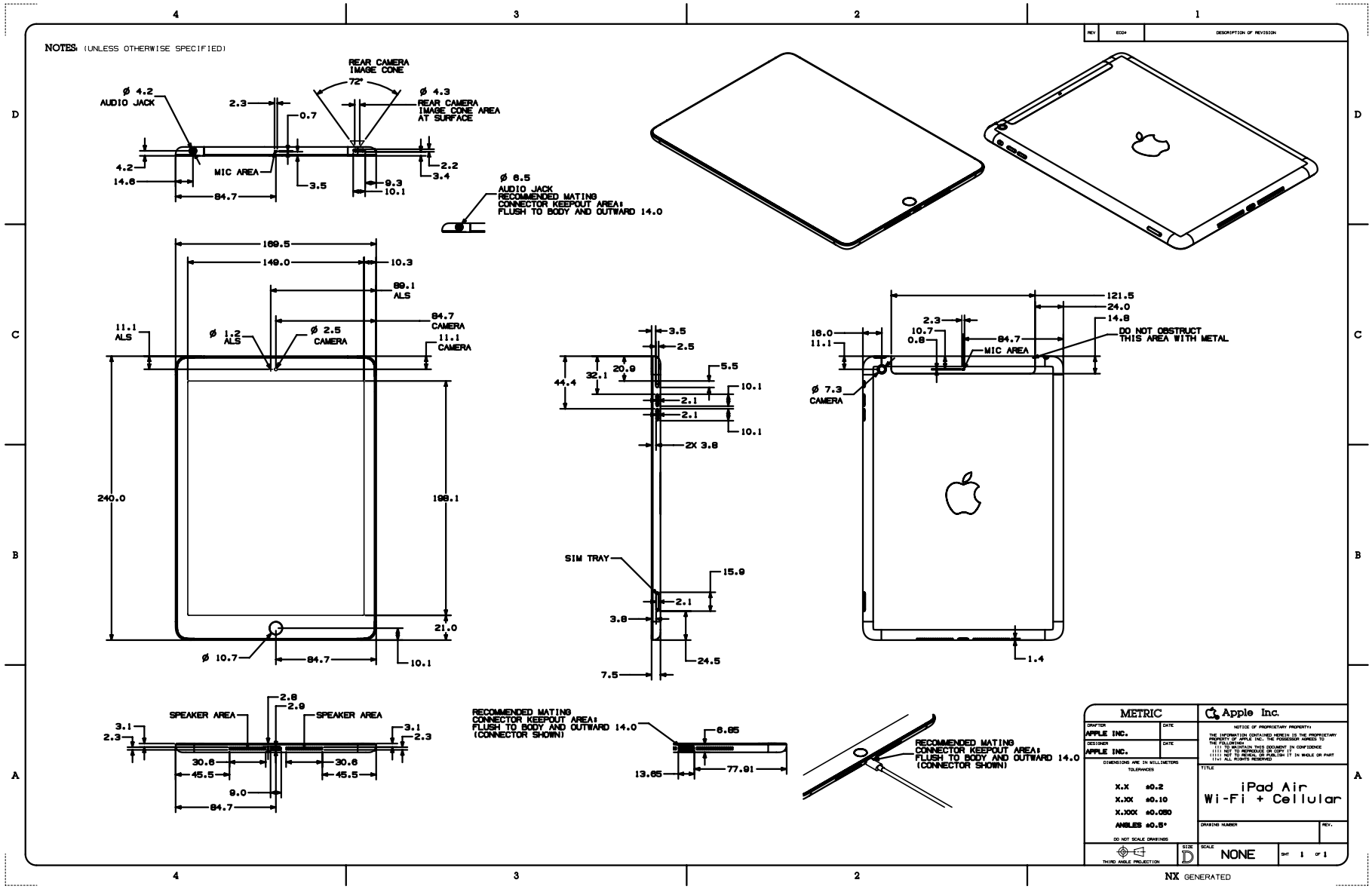

41.102 iPad mini with Wi-Fi

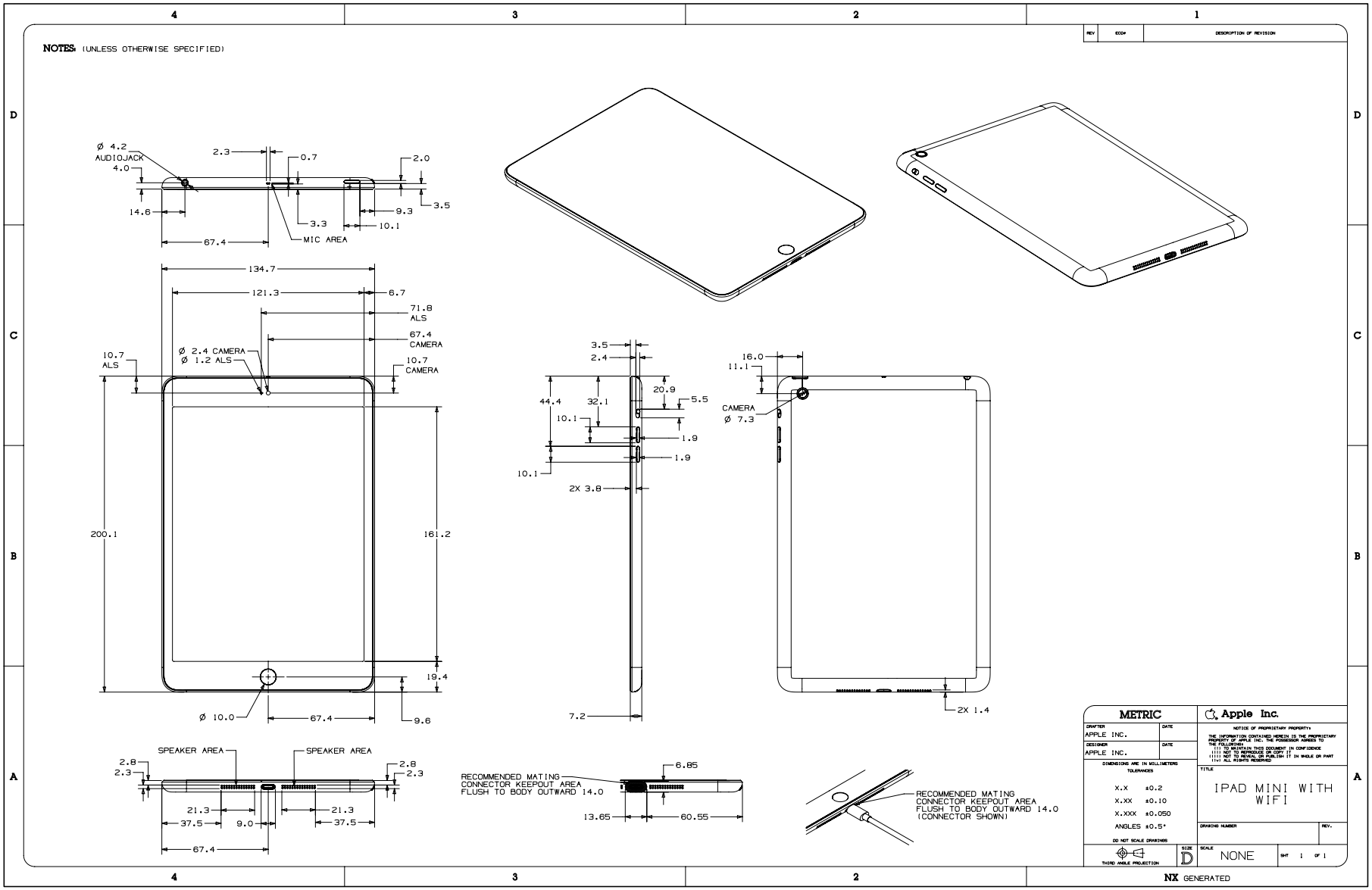

41.103 iPad mini with Wi-Fi + Cellular

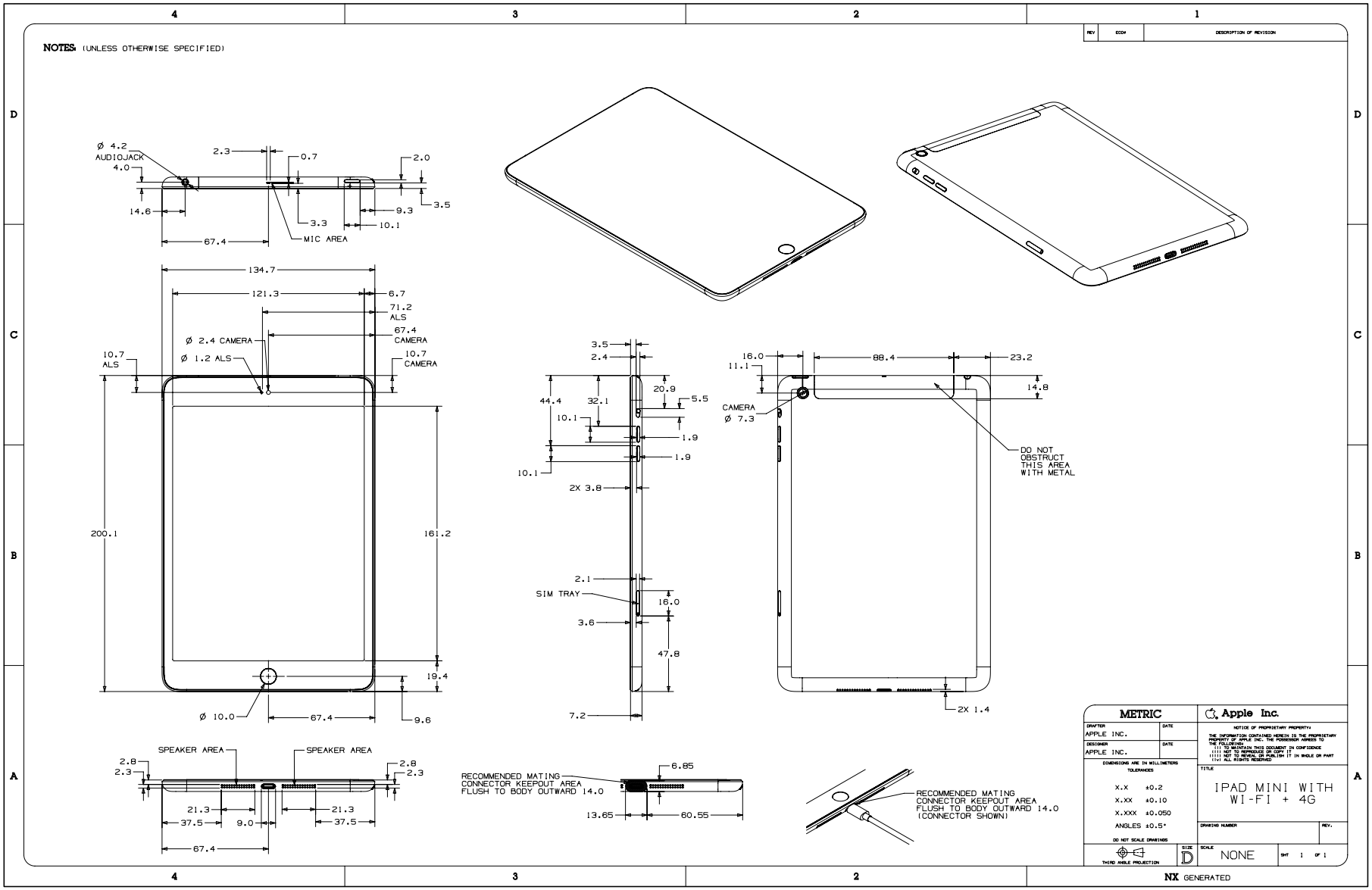

41.104 iPad (4th generation) with Wi-Fi

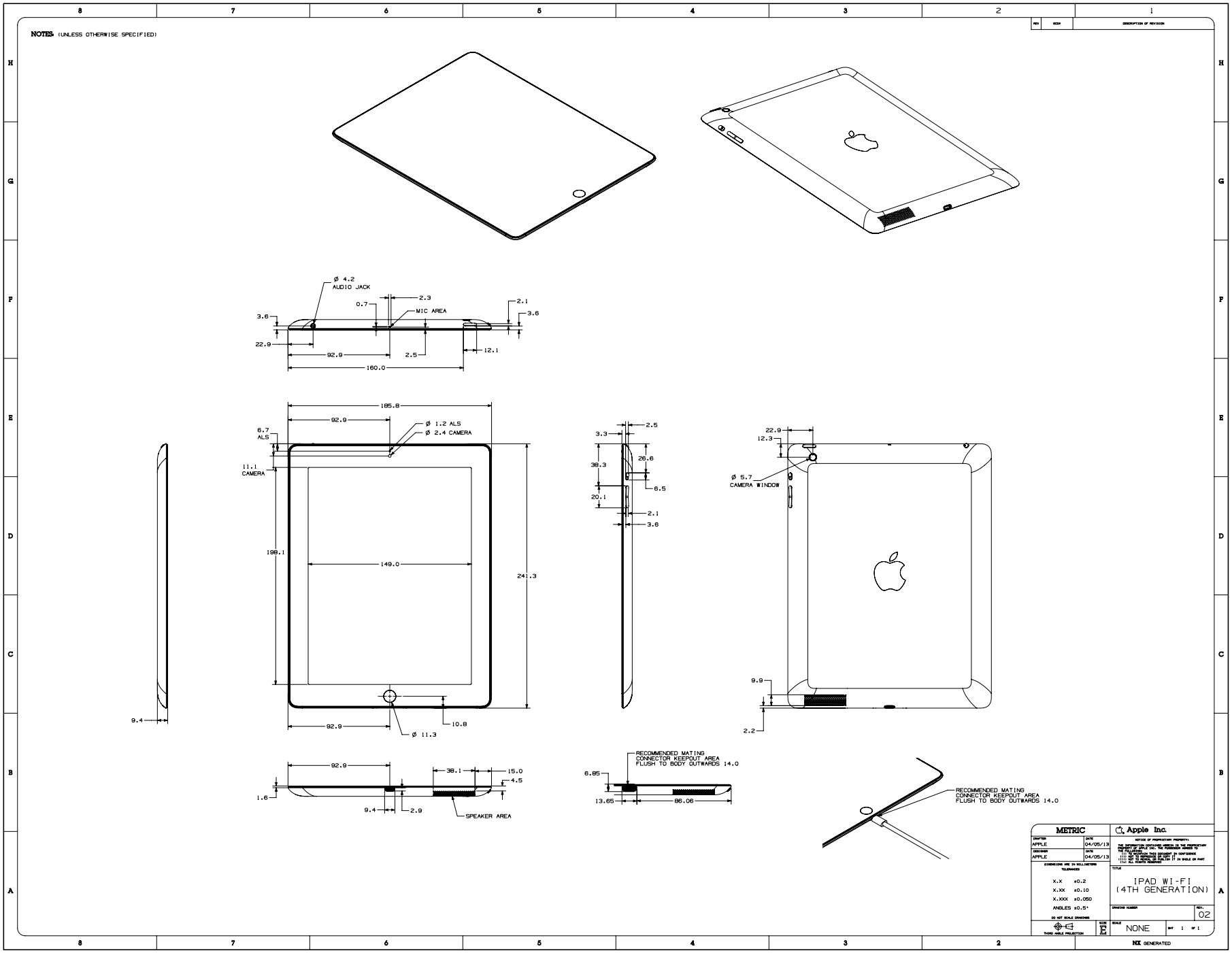

41.105 iPad (4th generation) with Wi-Fi + Cellular

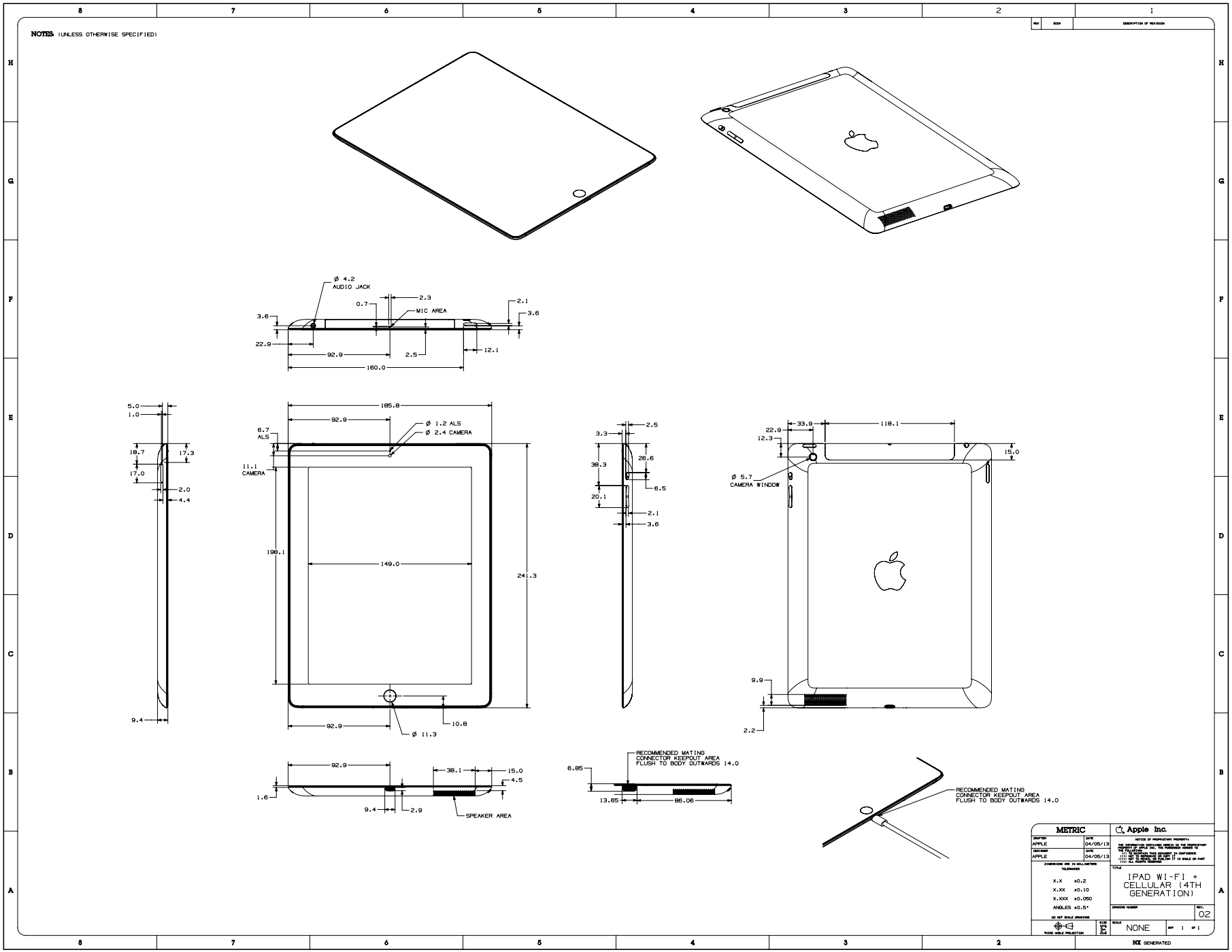

41.106 iPod touch (6th generation) & iPod touch (7th generation)

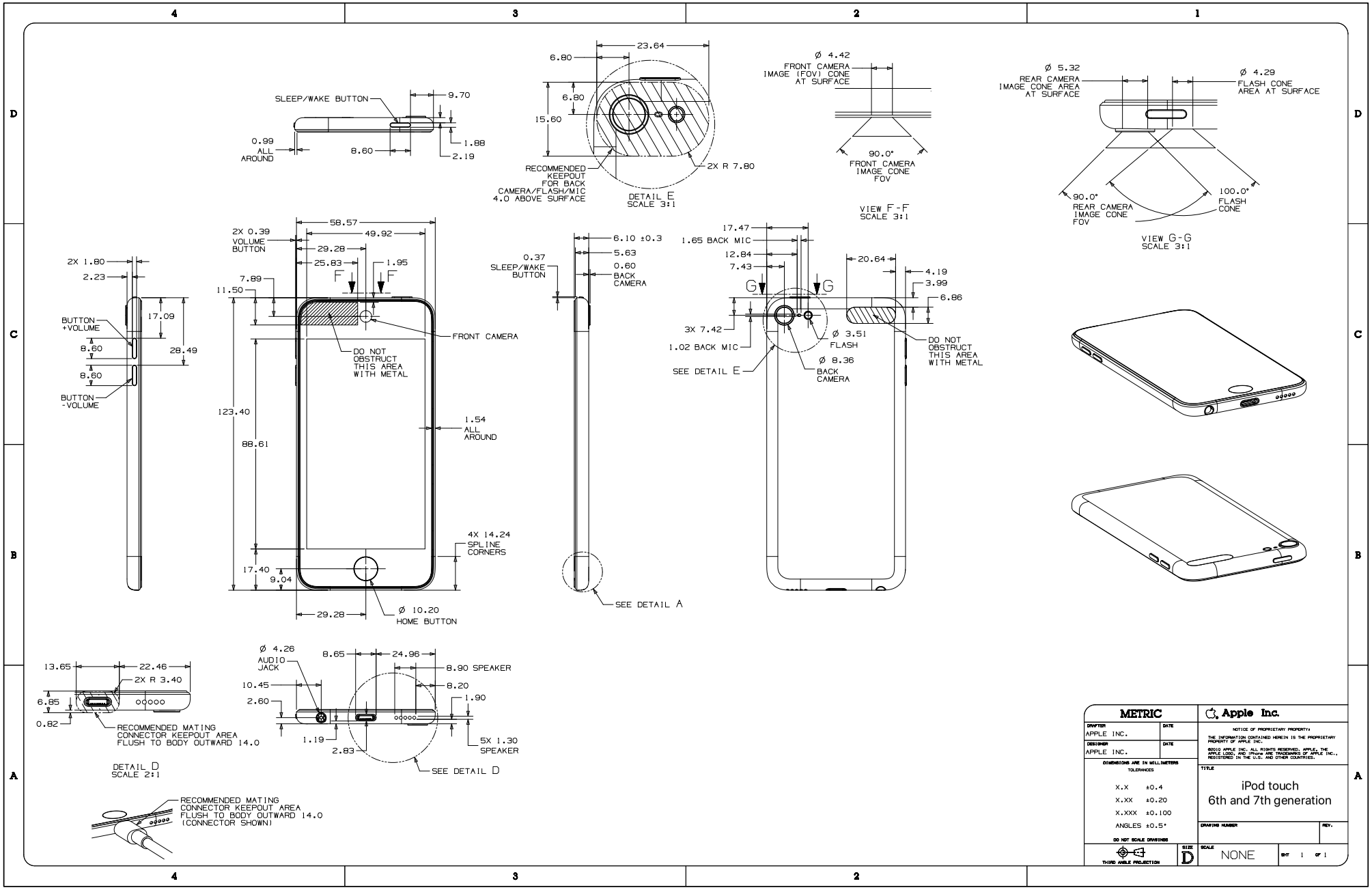

41.107 iPod touch (5th generation)

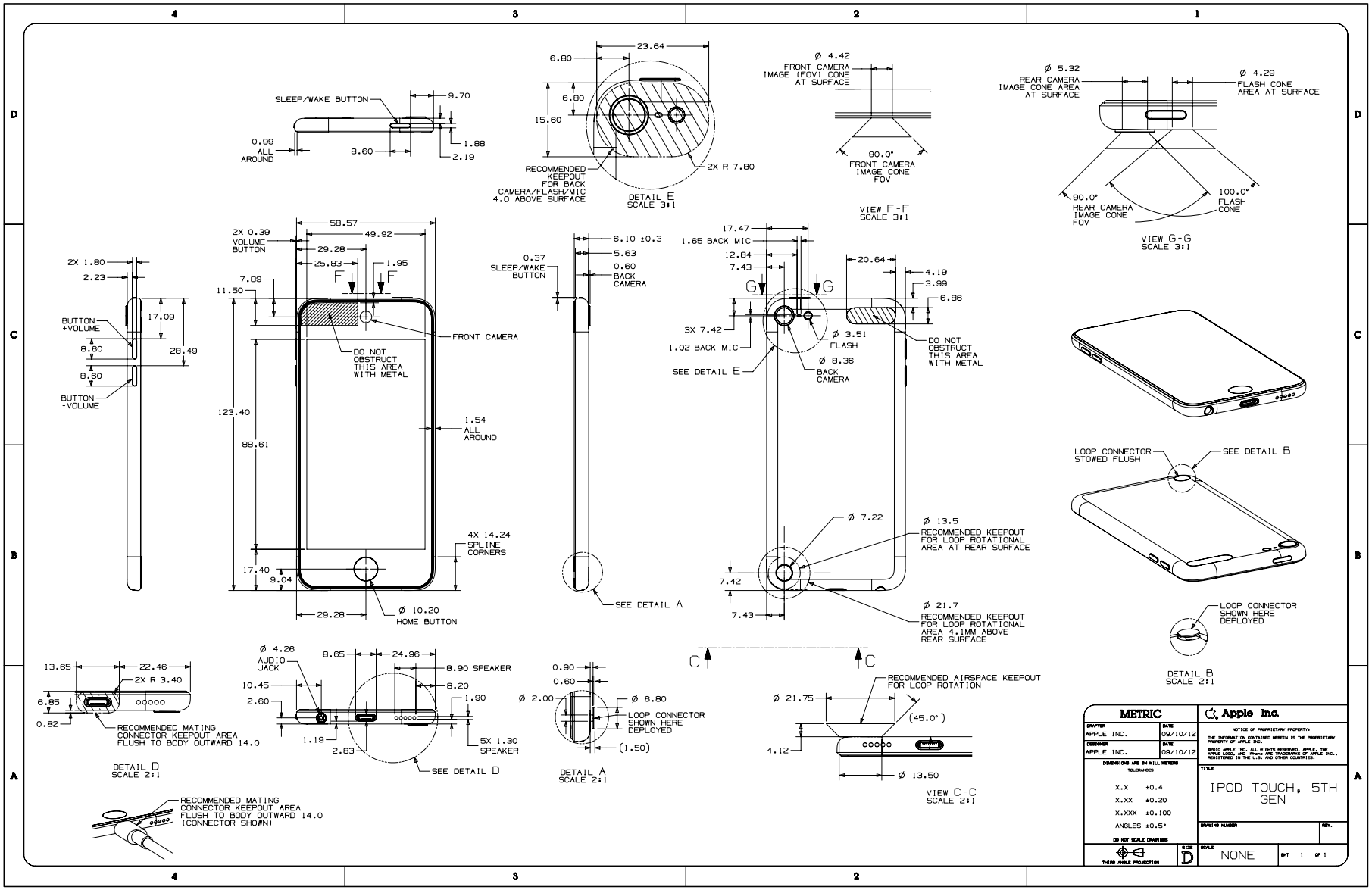

41.108 Apple Watch Series 6, 44 mm

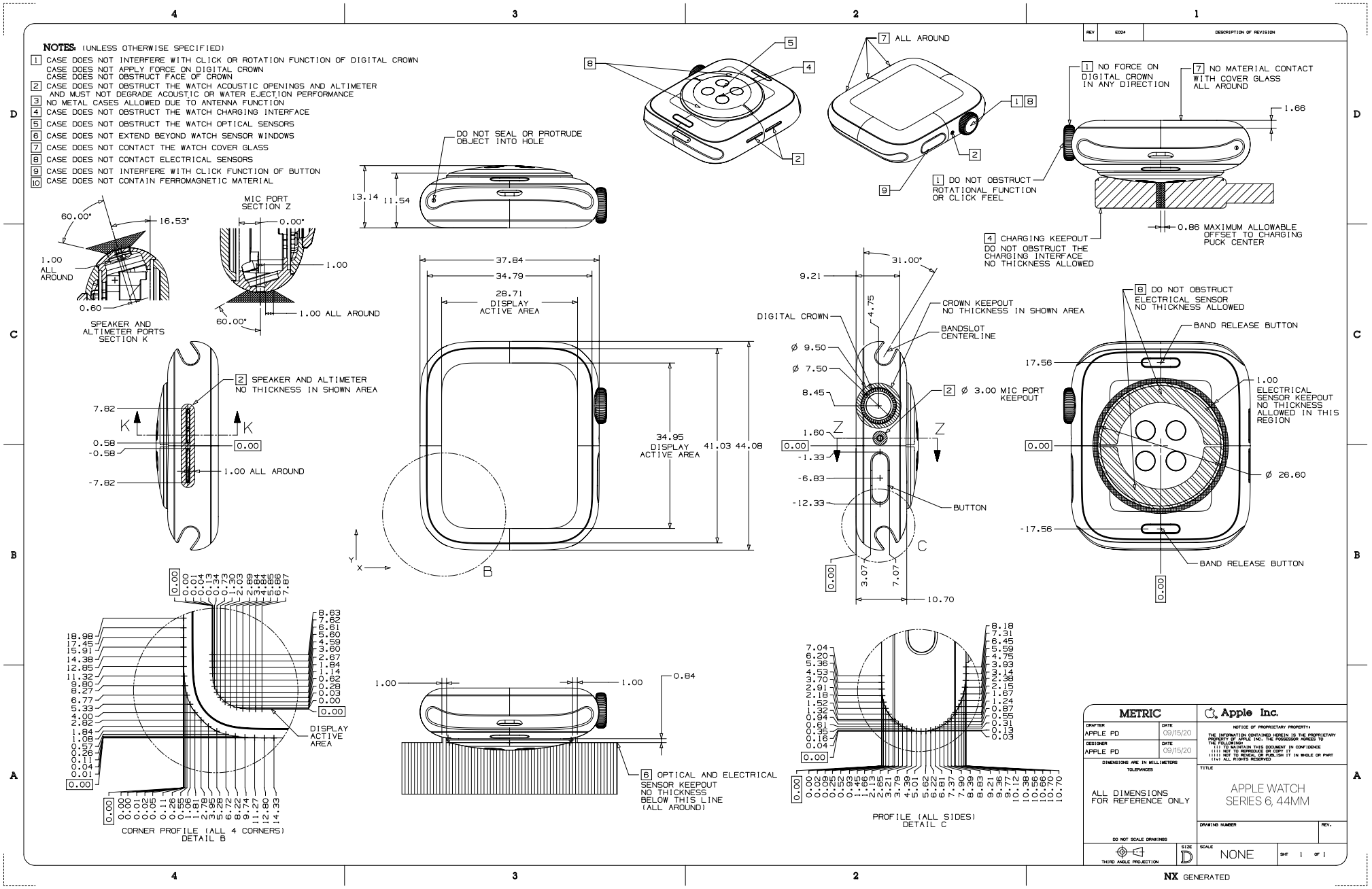

41.109 Apple Watch Series 6, 40 mm

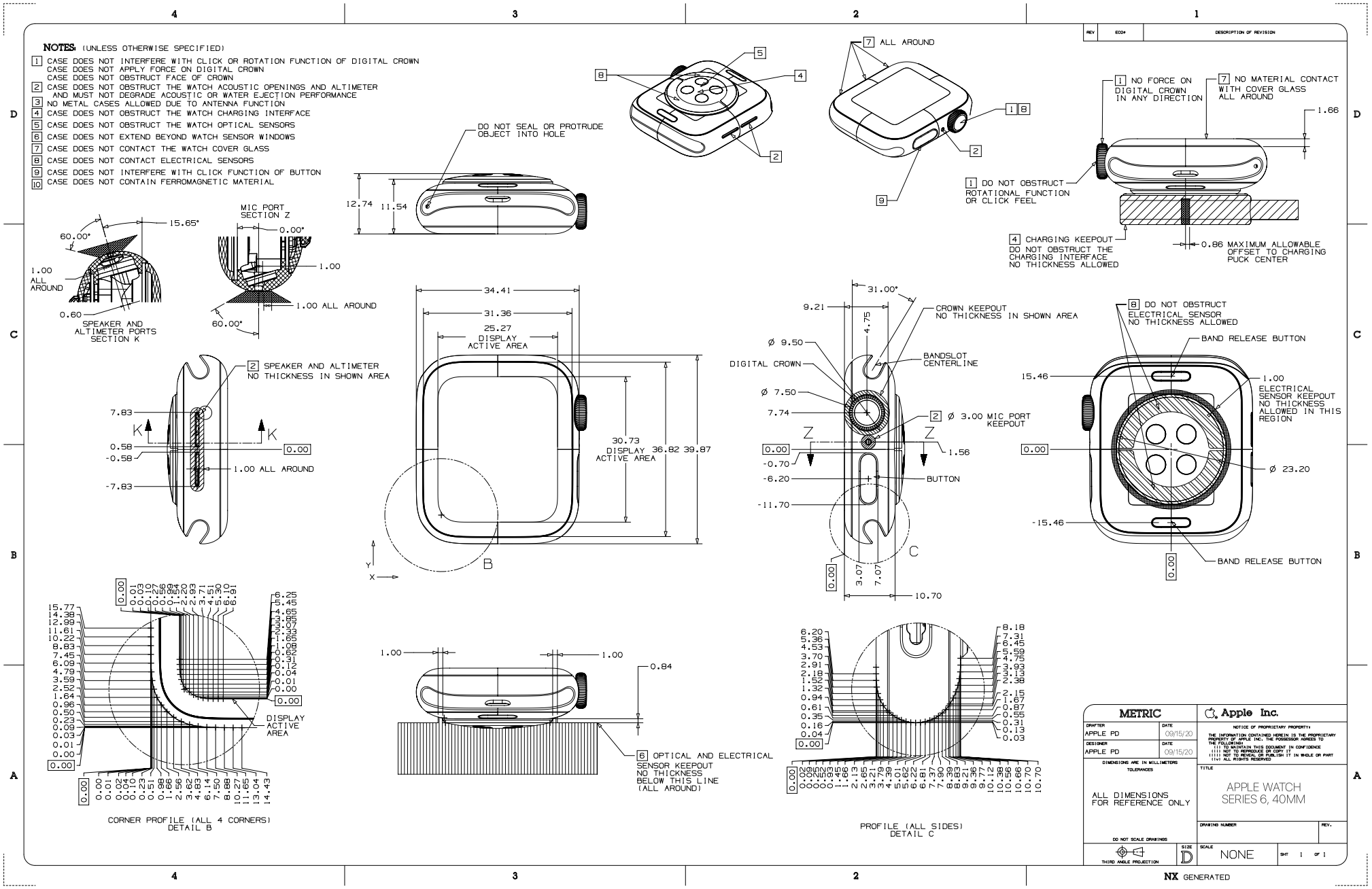

41.110 Apple Watch SE, 44 mm

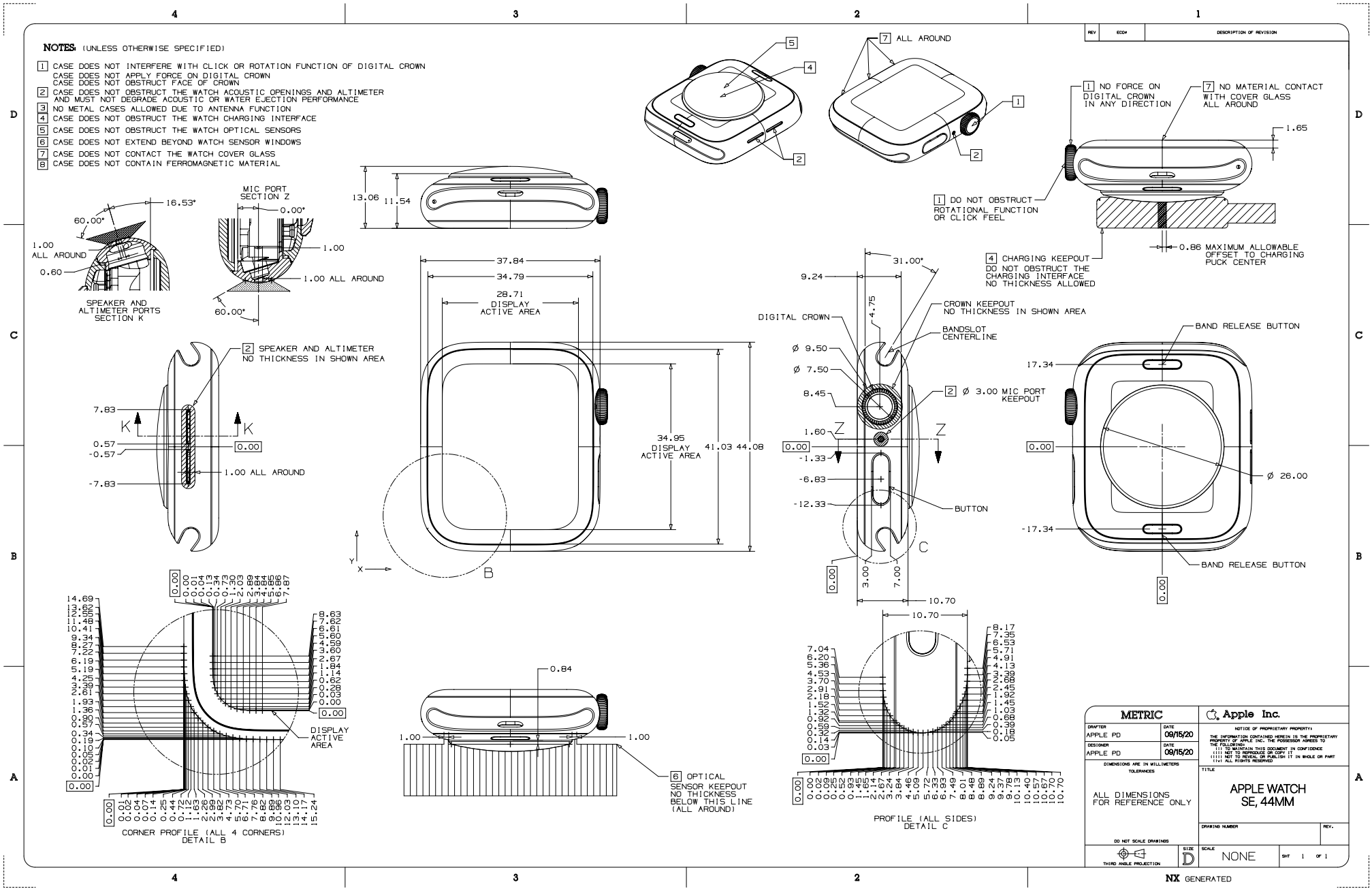

41.111 Apple Watch SE, 40 mm

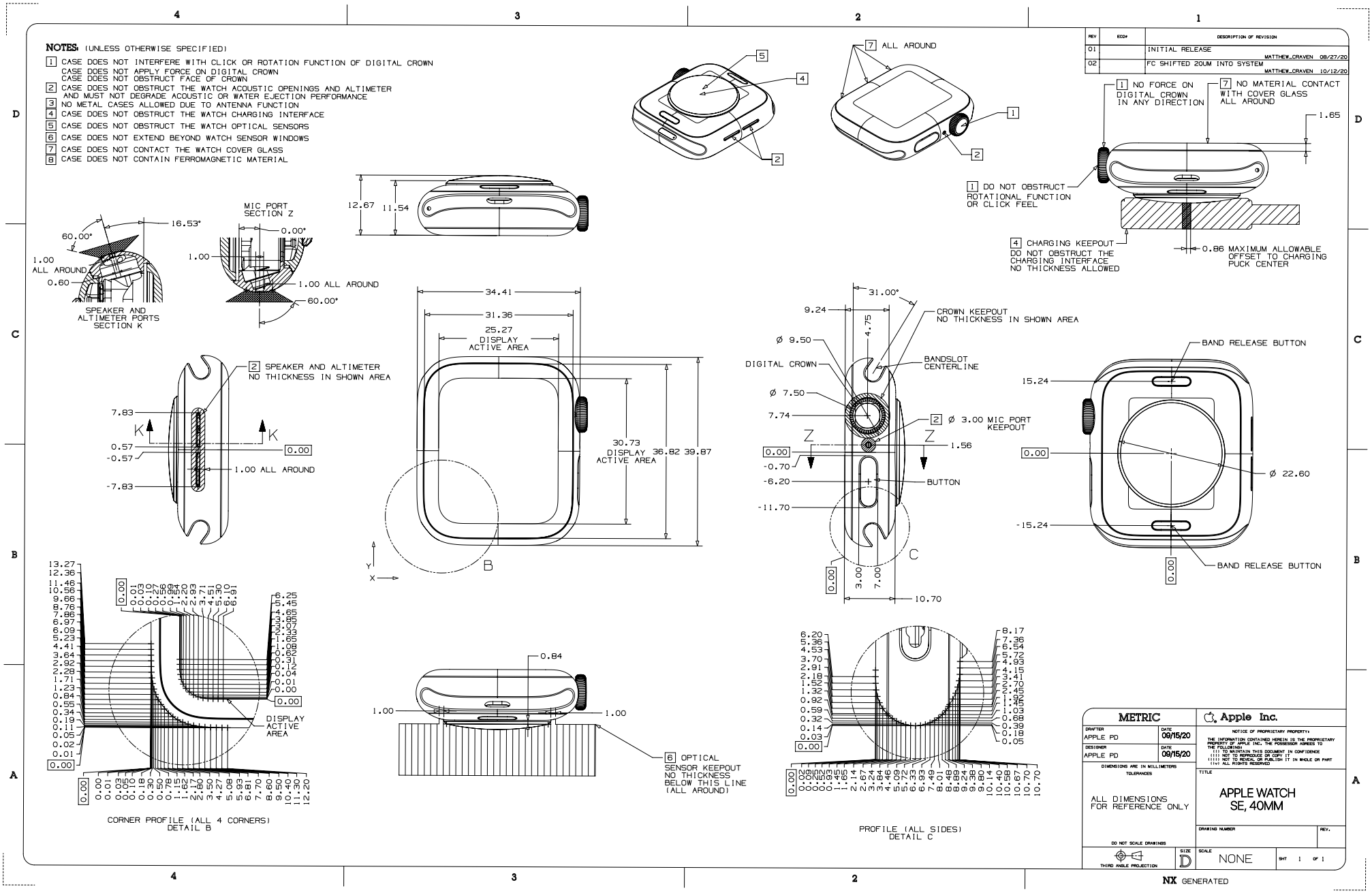

41.112 Apple Watch Series 5, 44 mm

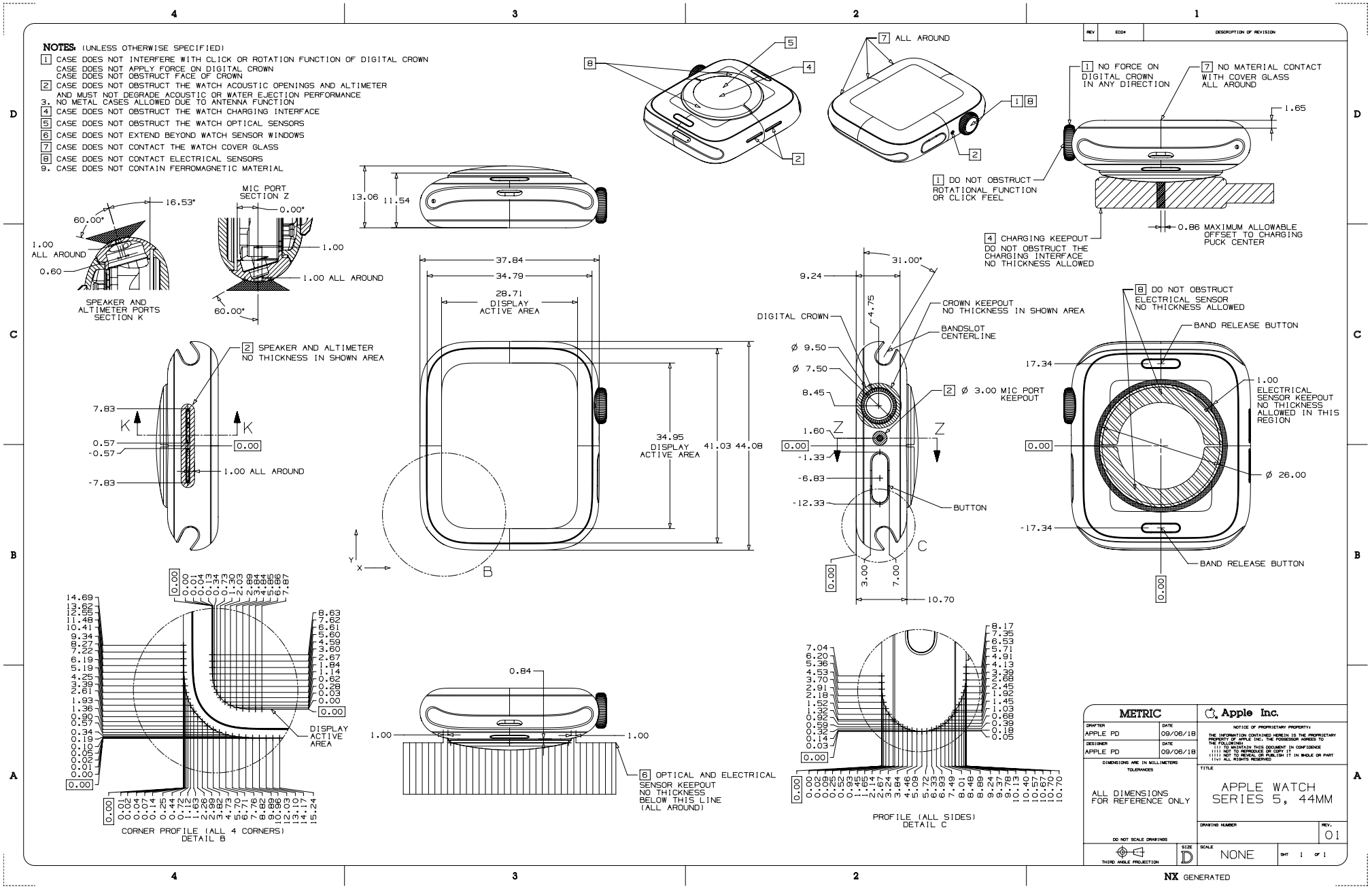

41.113 Apple Watch Series 5, 40 mm

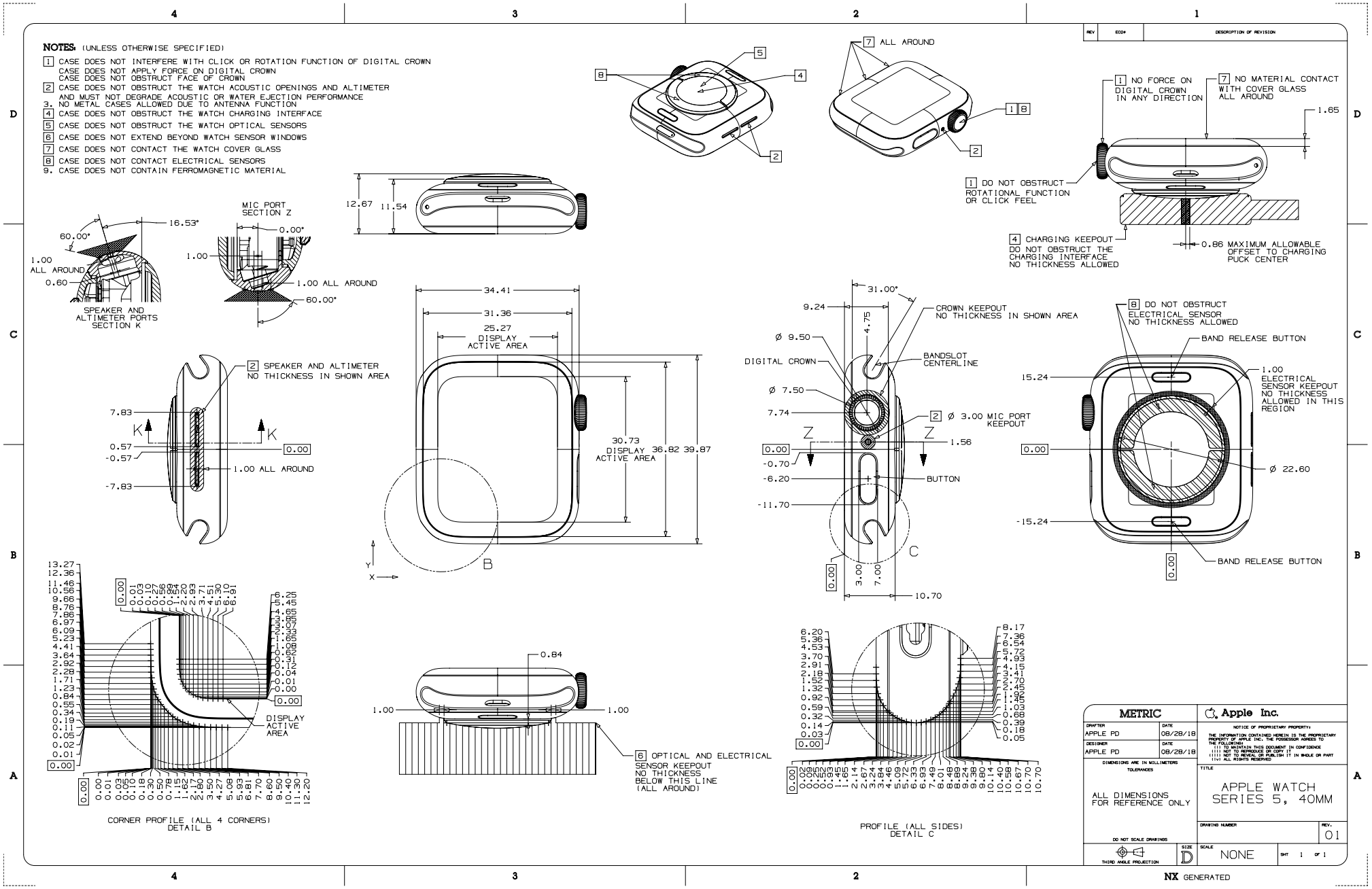

41.114 Apple Watch Series 5 Ceramic, 44 mm

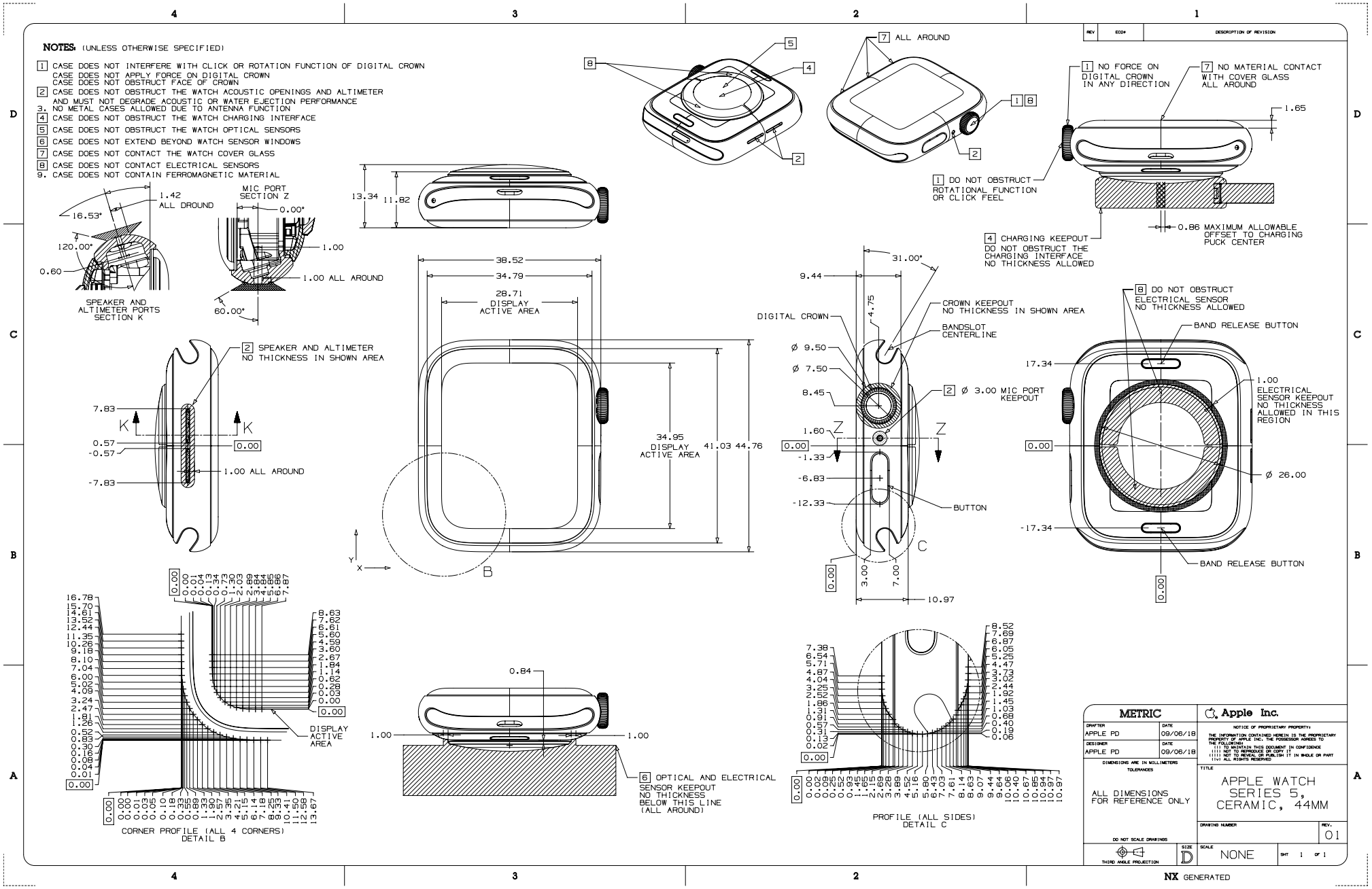

41.115 Apple Watch Series 5 Ceramic, 40 mm

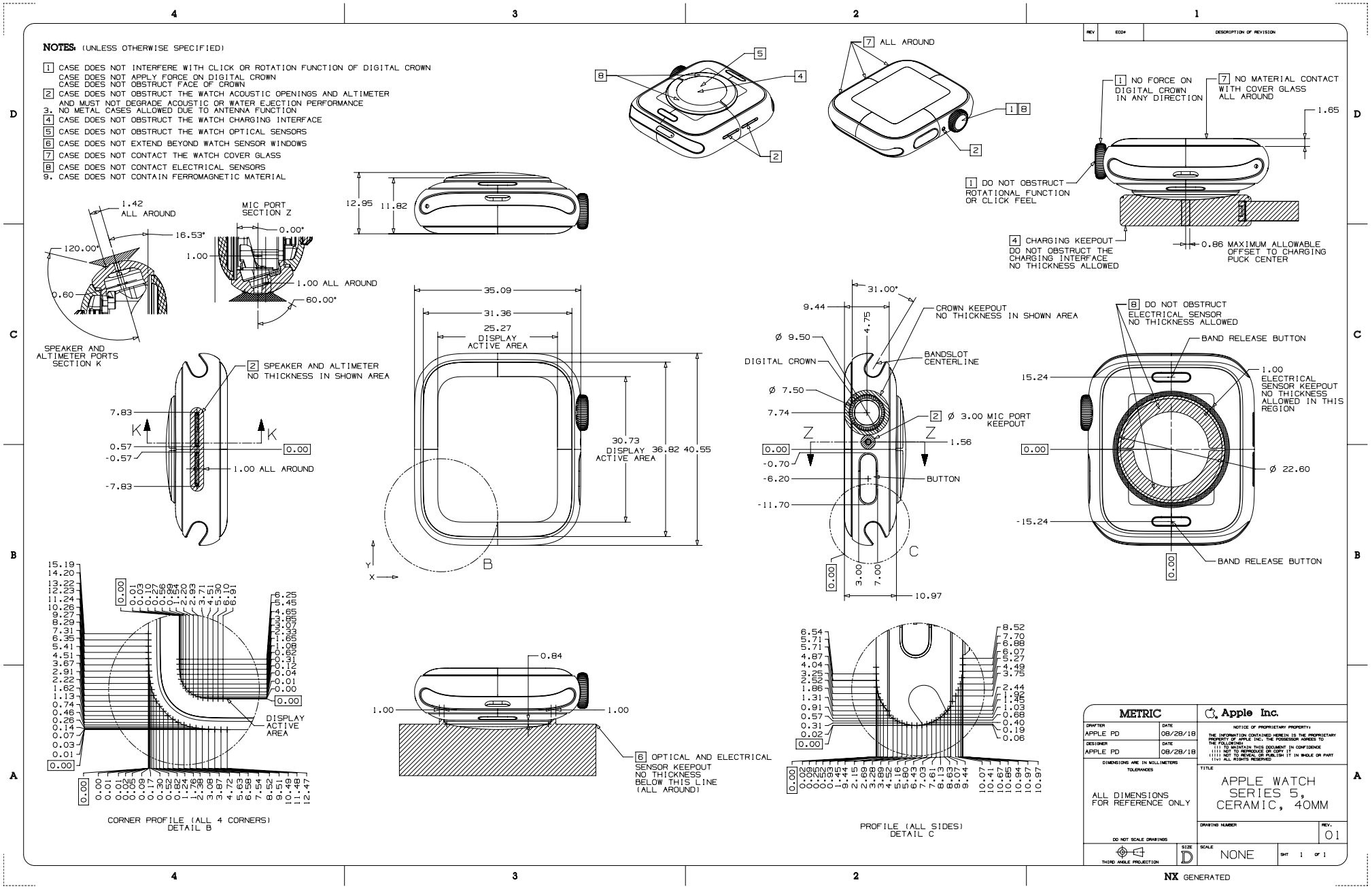

41.116 Apple Watch Series 4, 44 mm

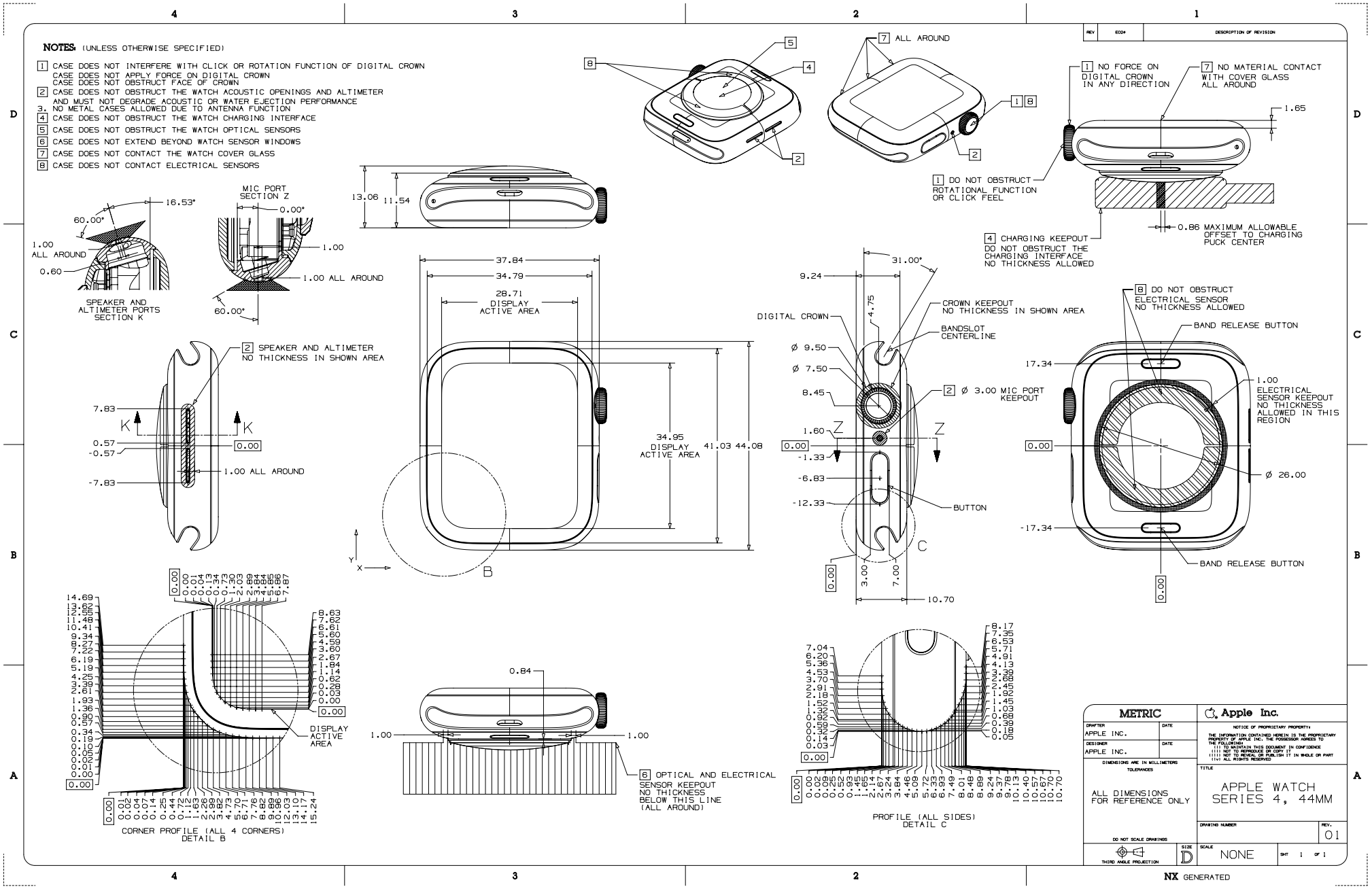

41.117 Apple Watch Series 4, 40 mm

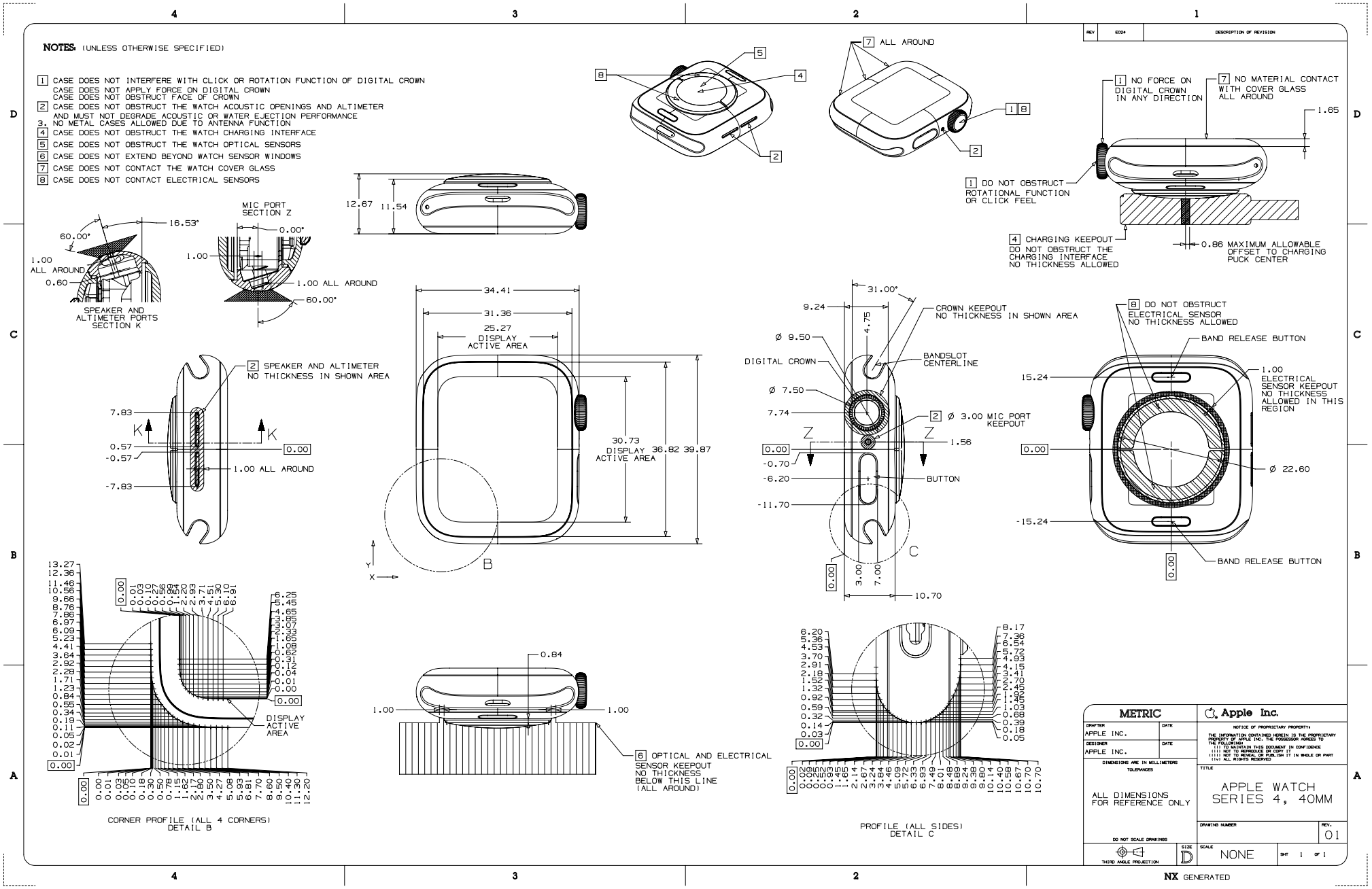

41.118 Apple Watch Series 3 Ceramic, 42 mm

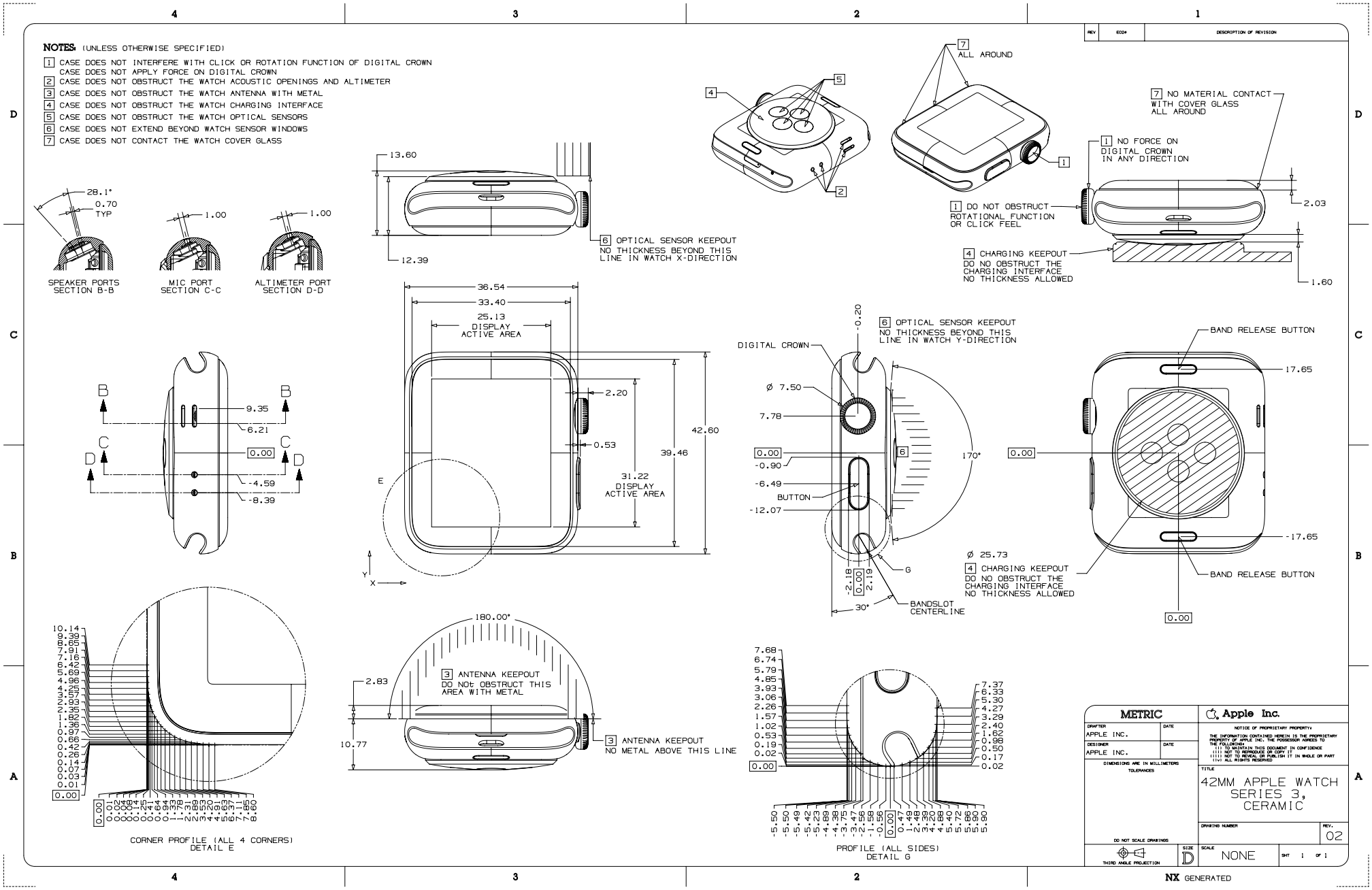

41.119 Apple Watch Series 3 Ceramic, 38 mm

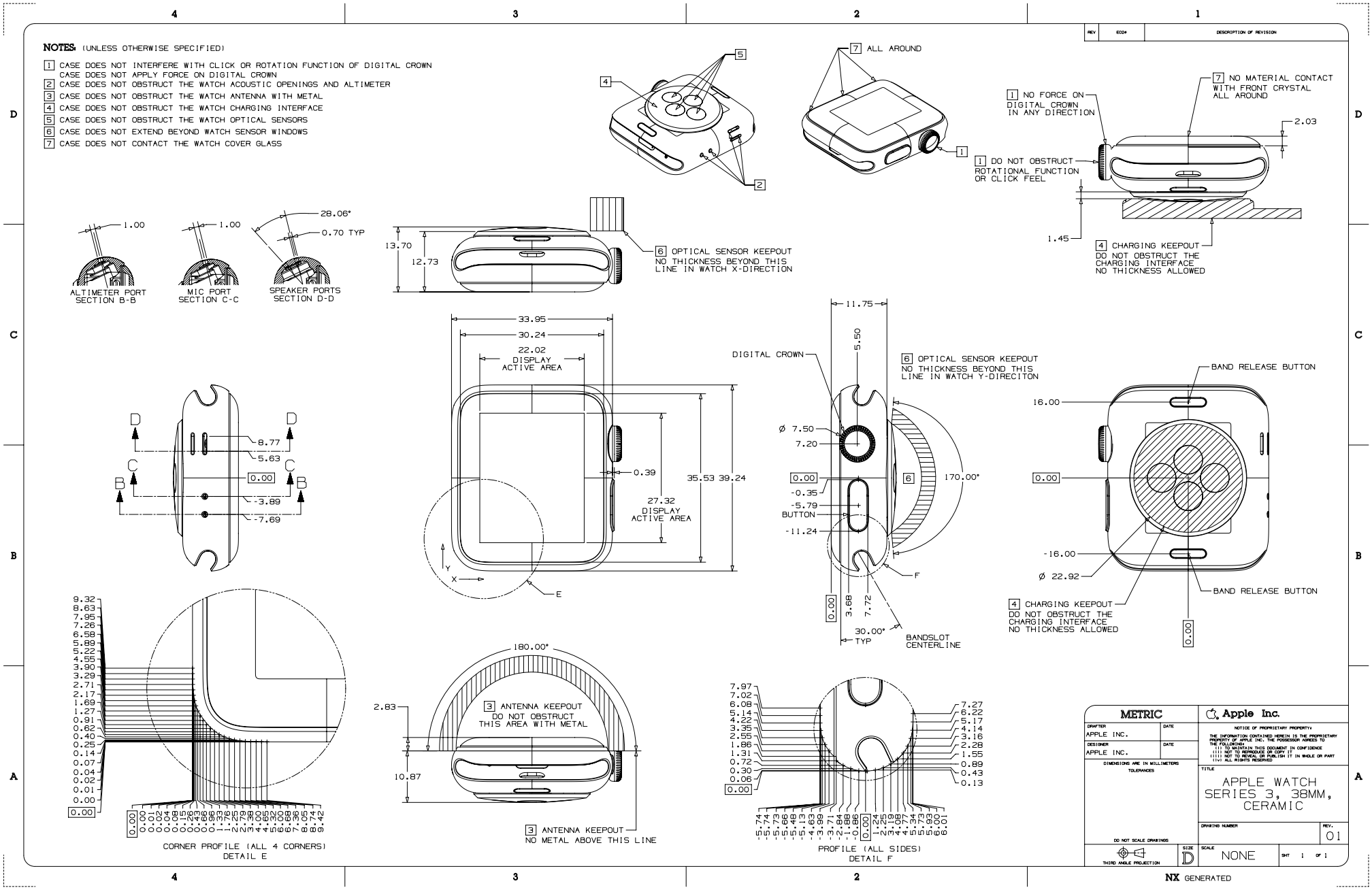

41.120 Apple Watch Series 3 Metal, 42 mm

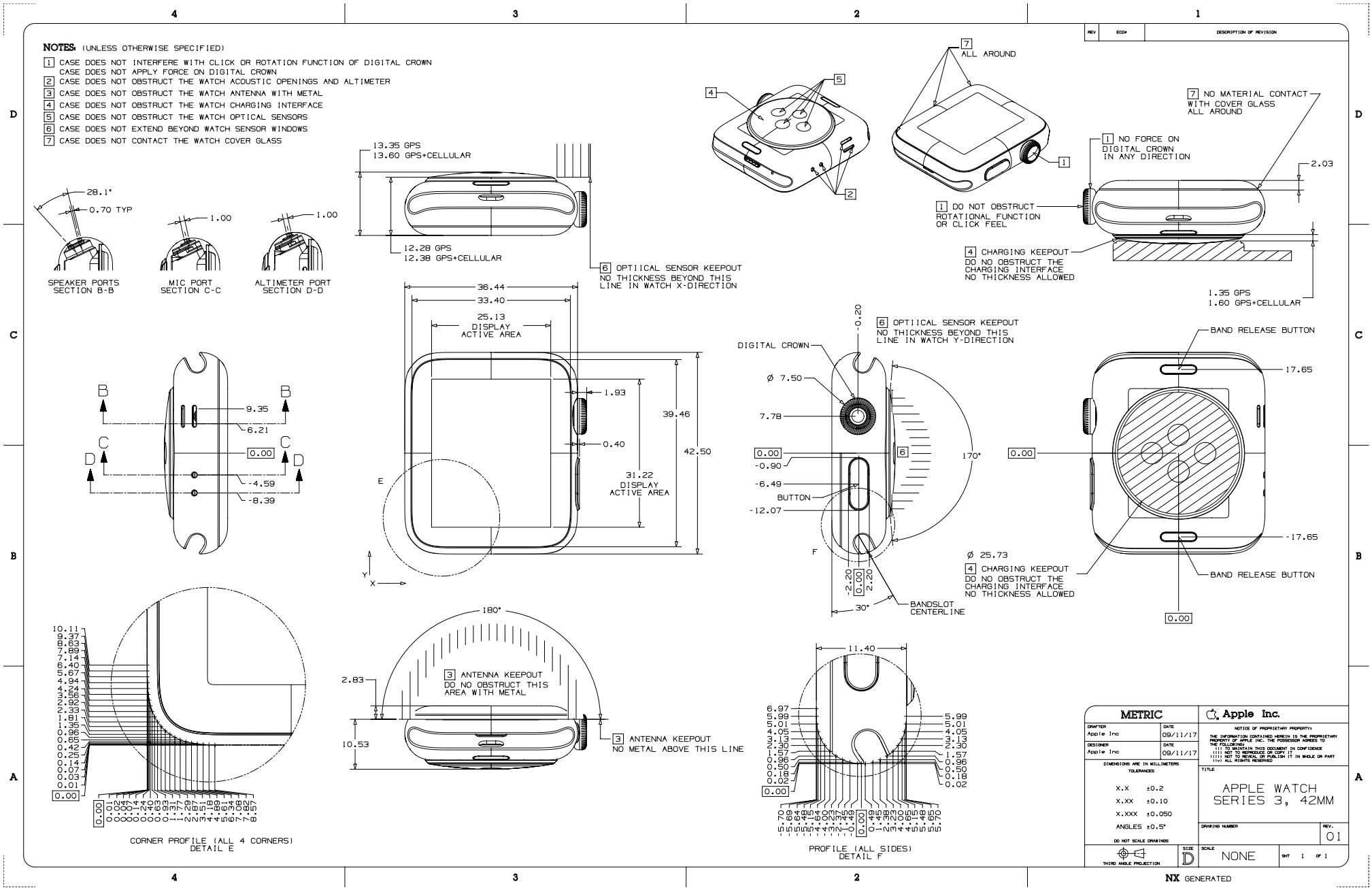

41.121 Apple Watch Series 3 Metal, 38 mm

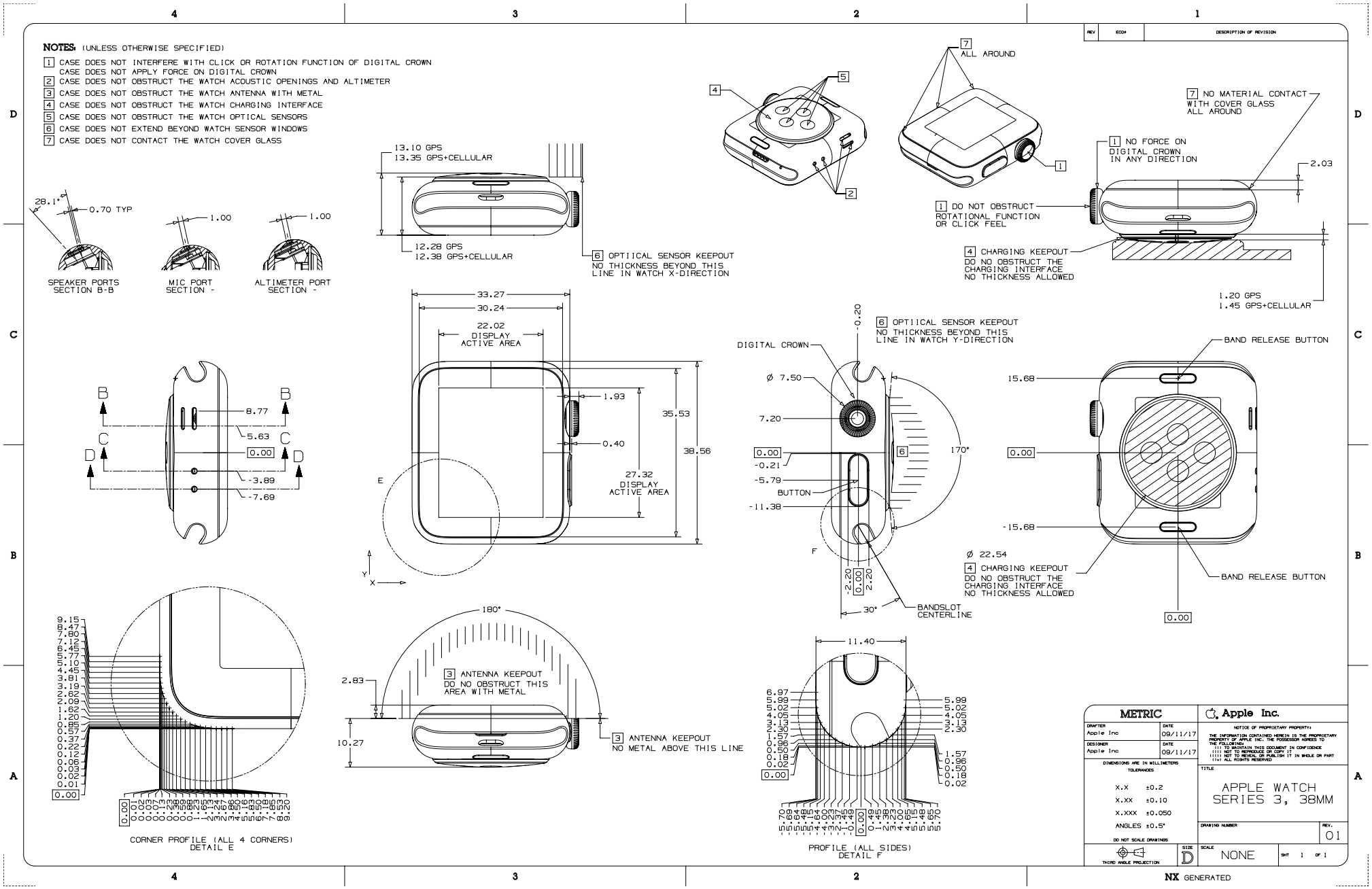

41.122 Apple Watch Series 2 Ceramic, 42 mm

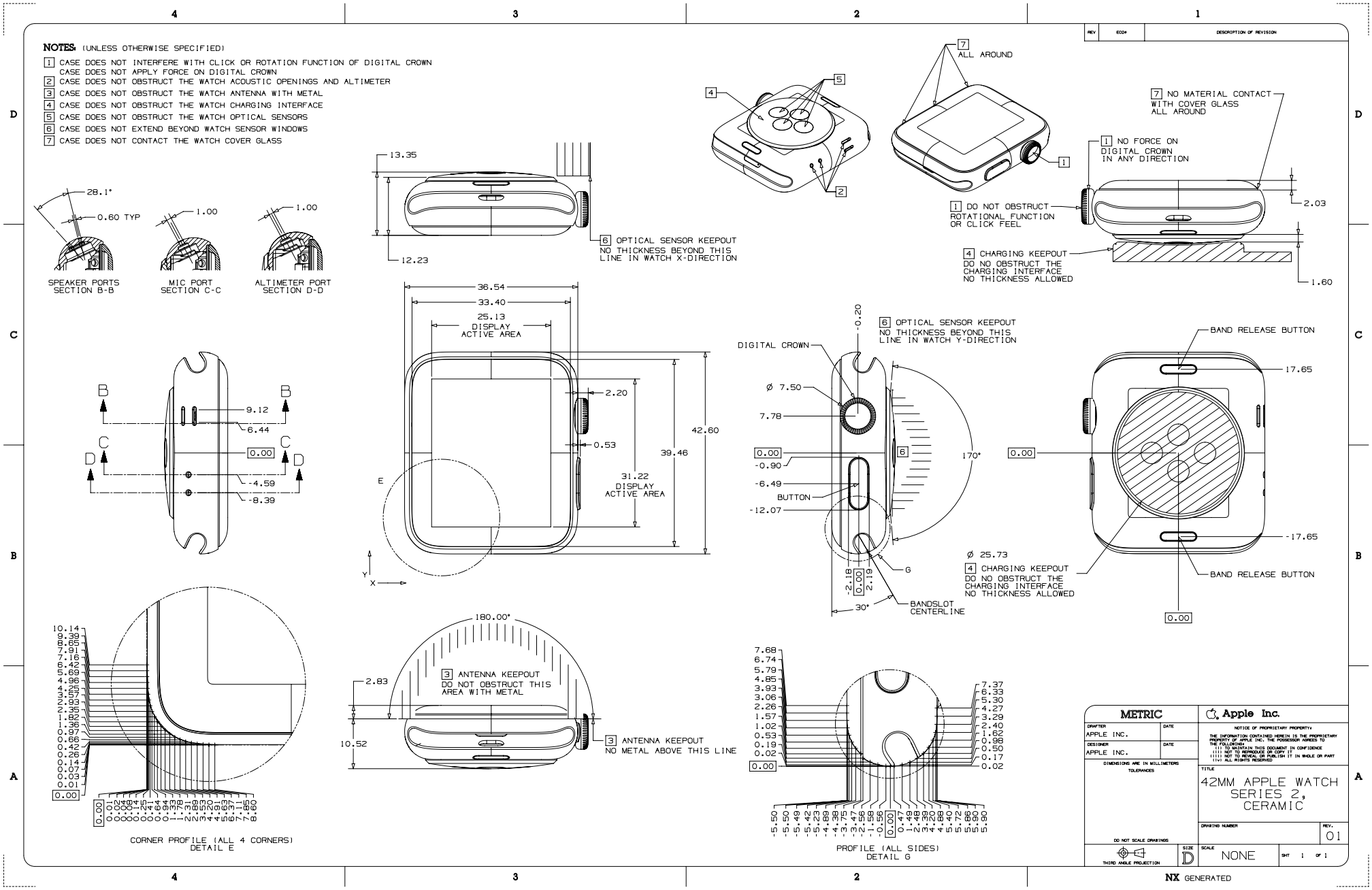

41.123 Apple Watch Series 2 Ceramic, 38 mm

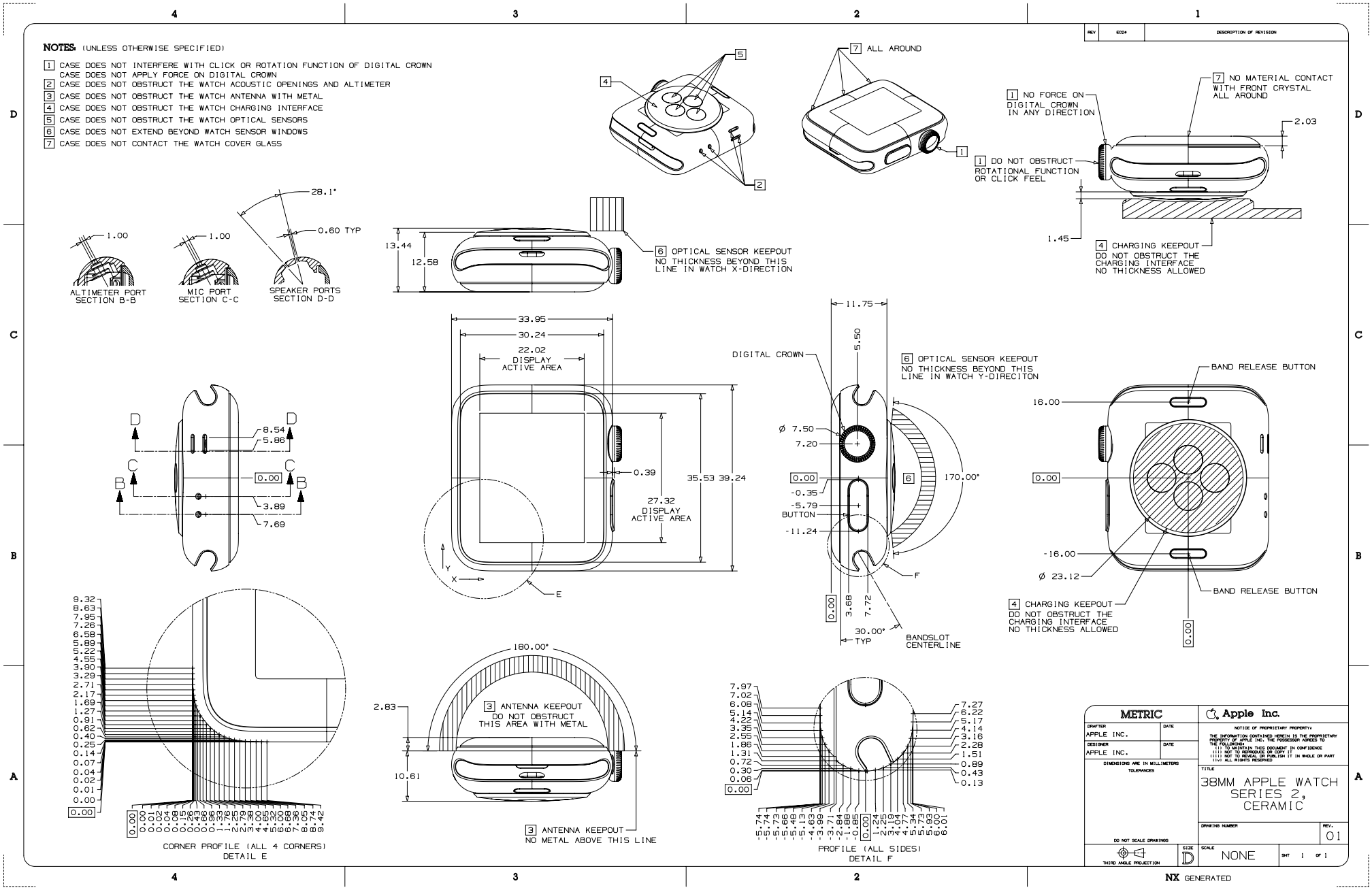

41.124 Apple Watch Series 2 Metal, 42 mm

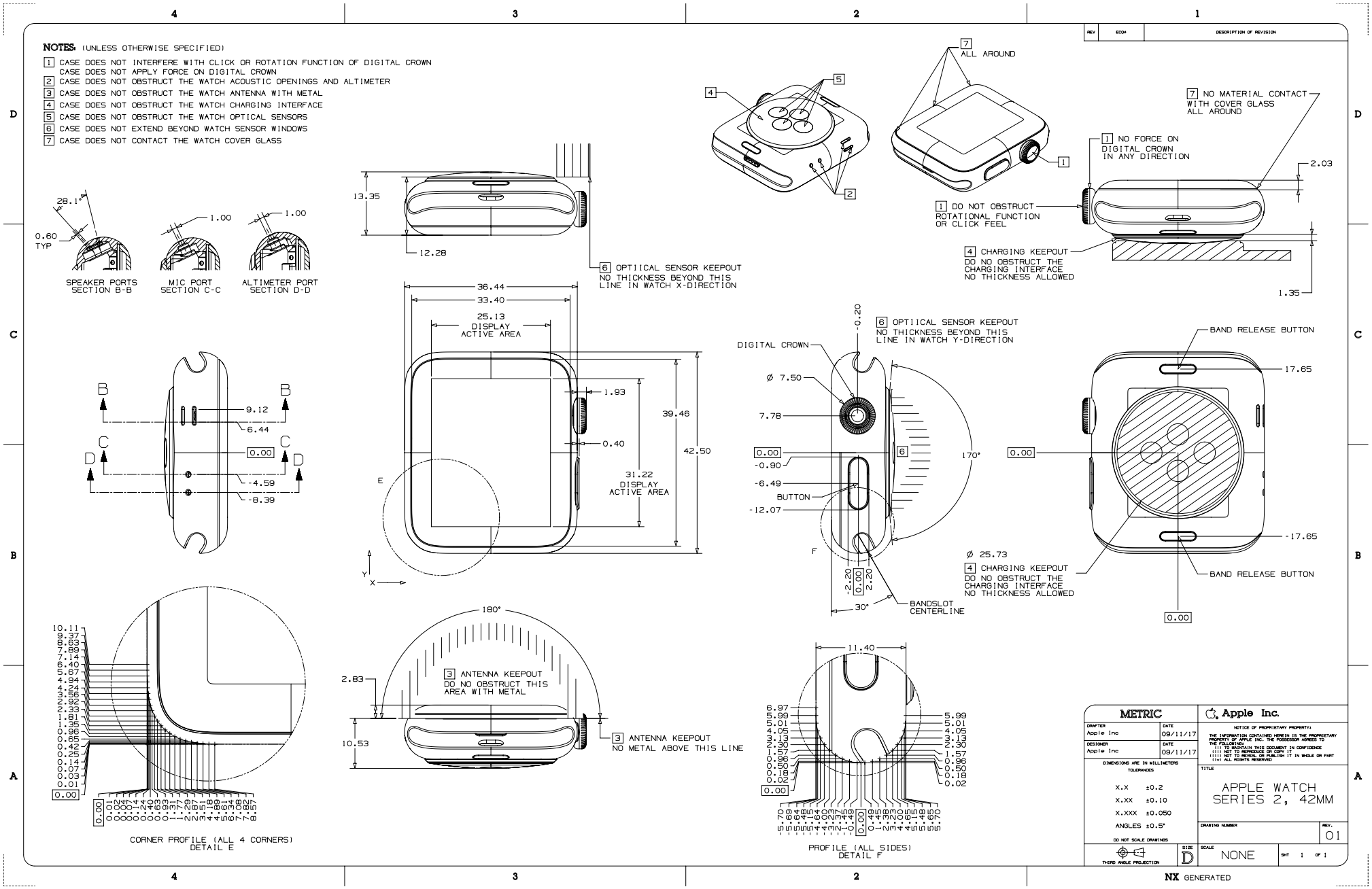

41.125 Apple Watch Series 2 Metal, 38 mm

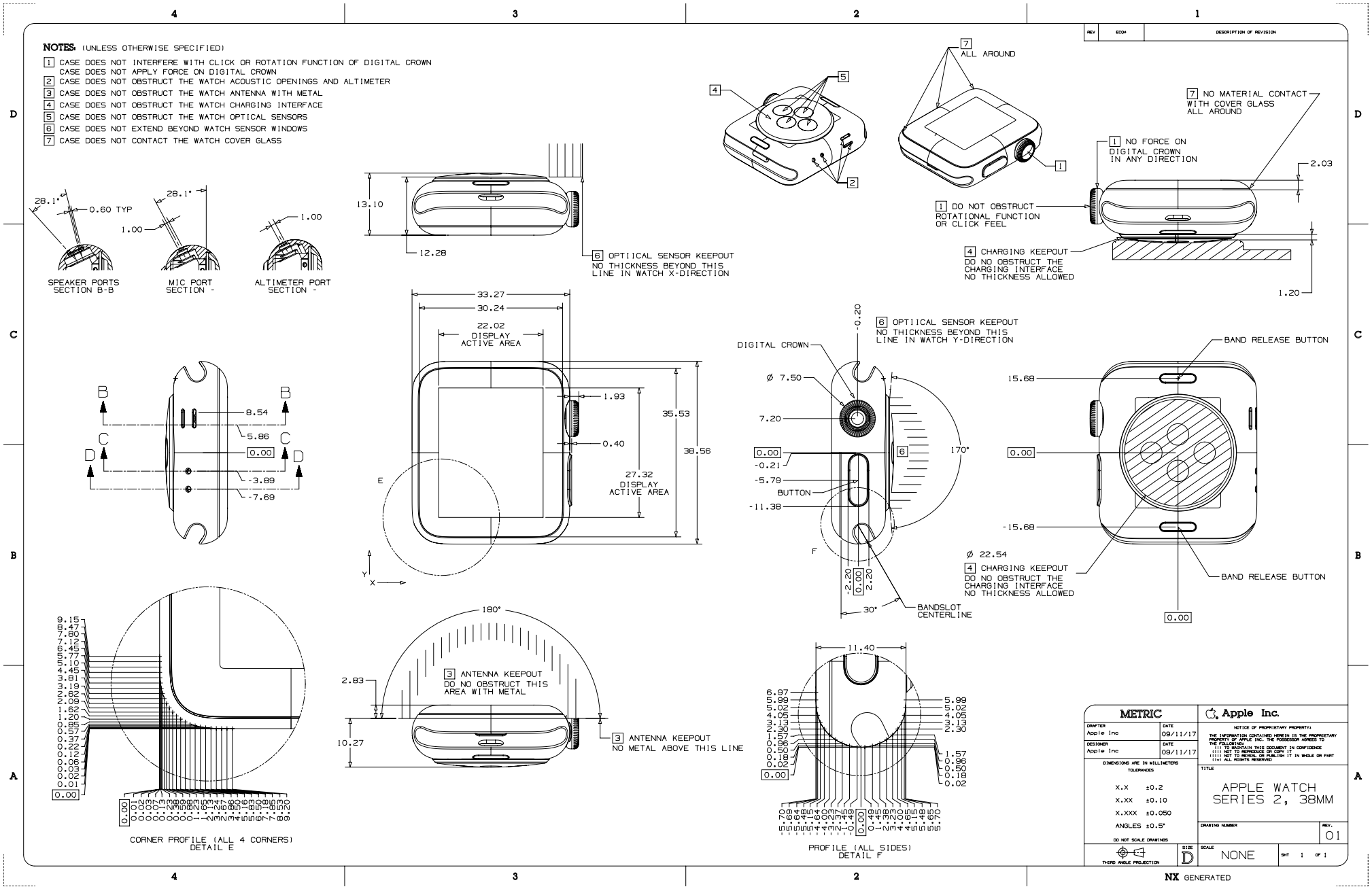

41.126 Apple Watch (1st generation) & Apple Watch Series 1, 42 mm

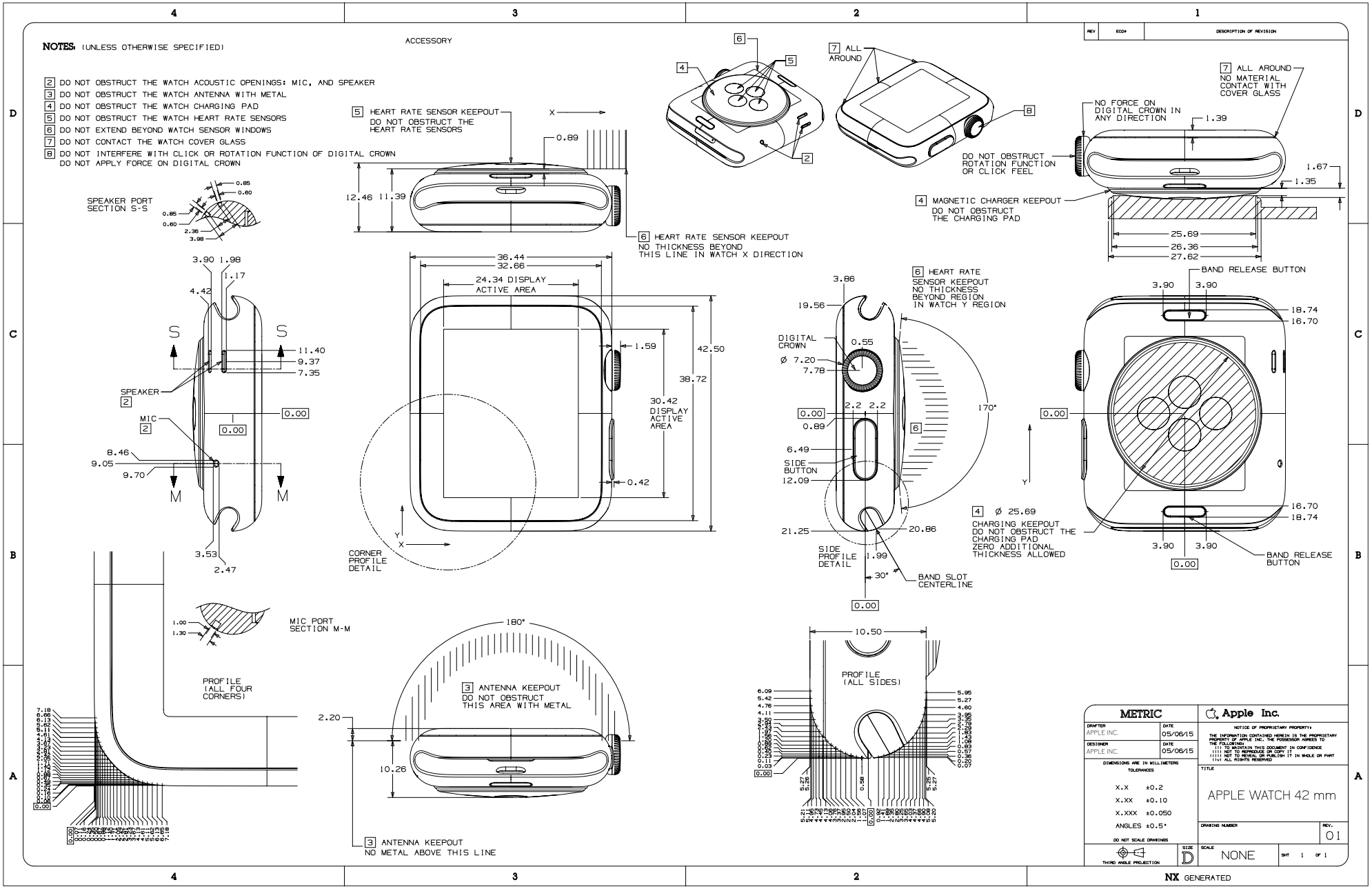

41.127 Apple Watch (1st generation) & Apple Watch Series 1, 38 mm

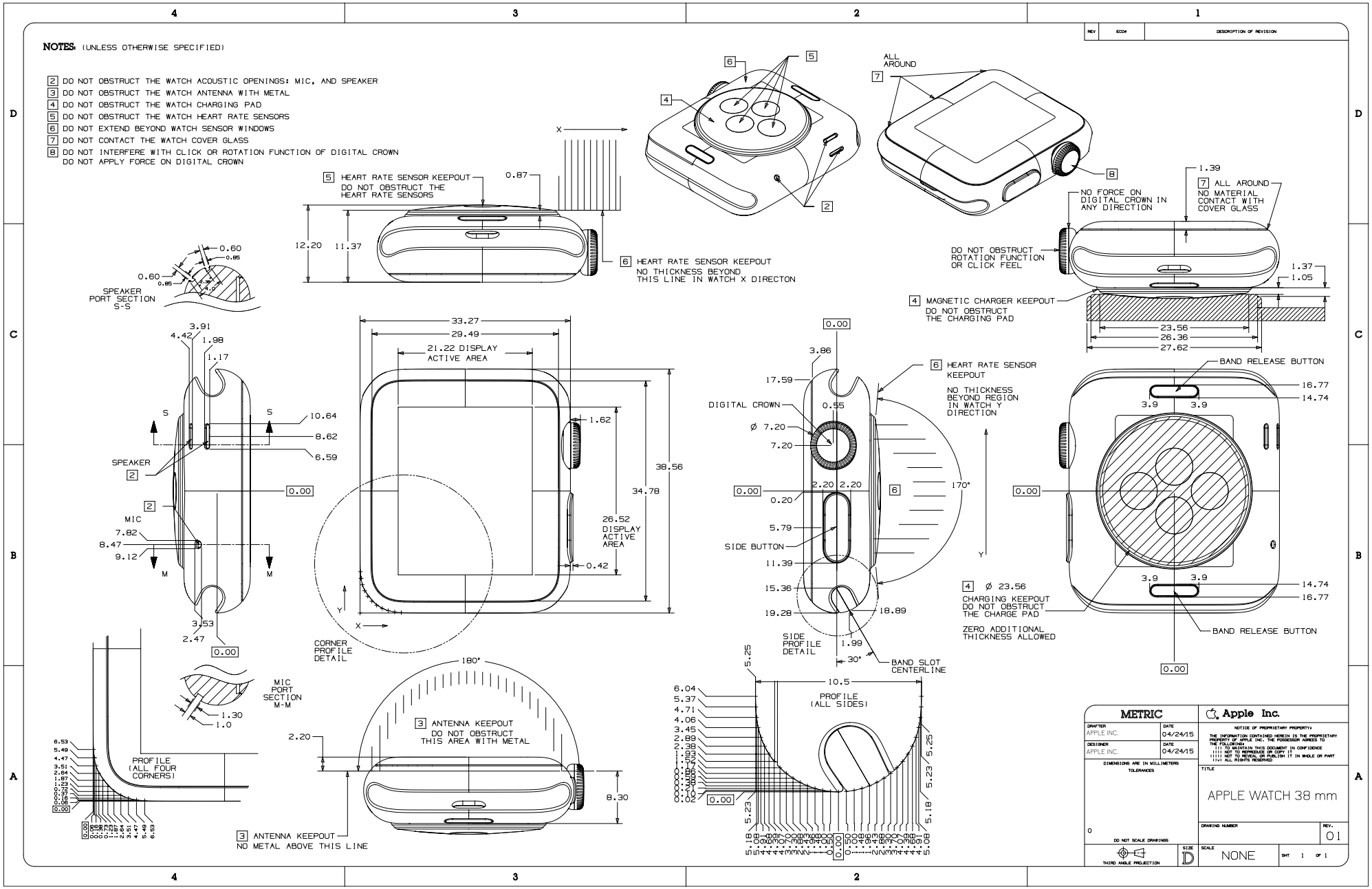

41.128 AirPods Pro Wireless Charging Case

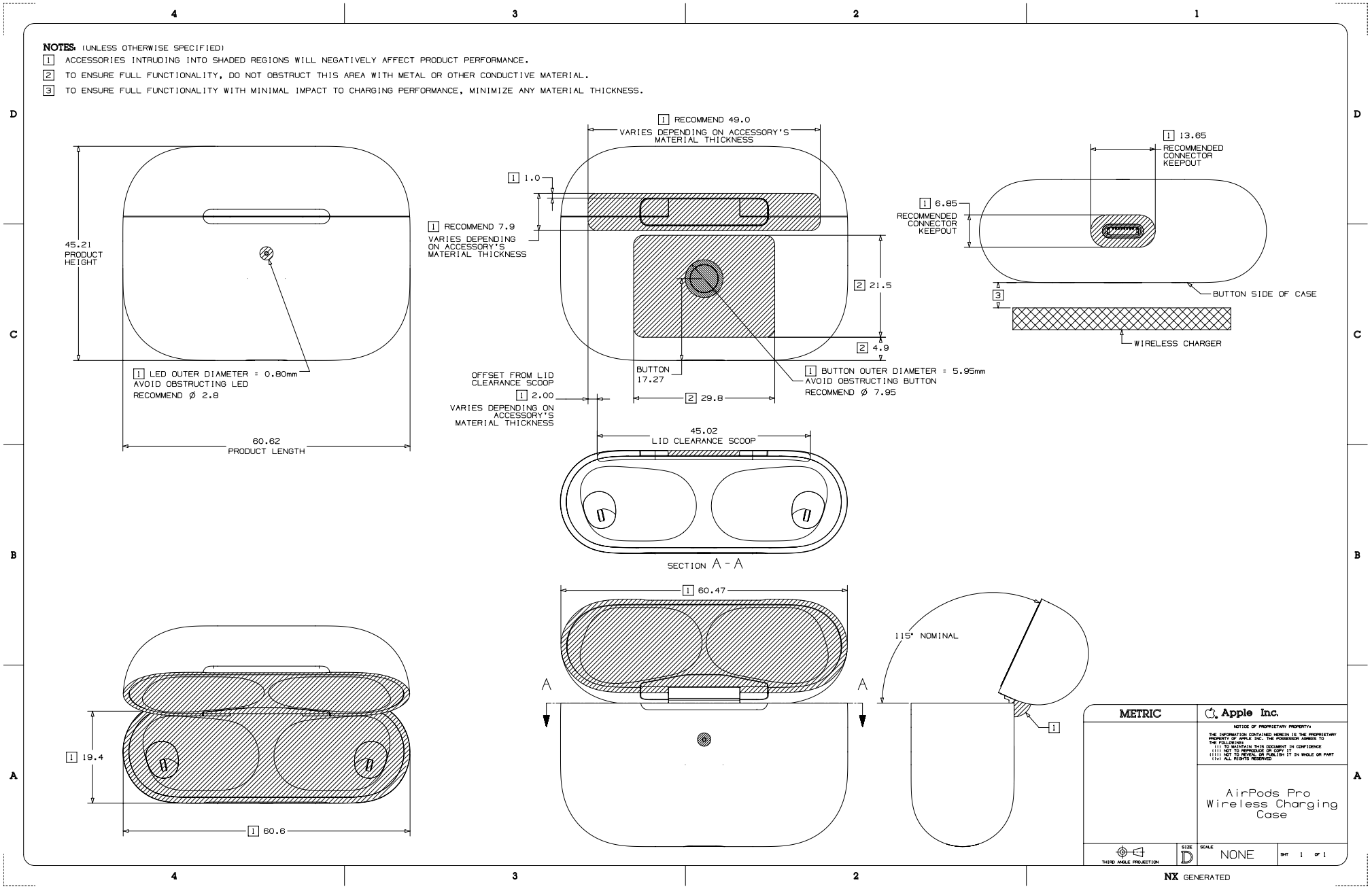

41.129 AirPods Wireless Charging Case

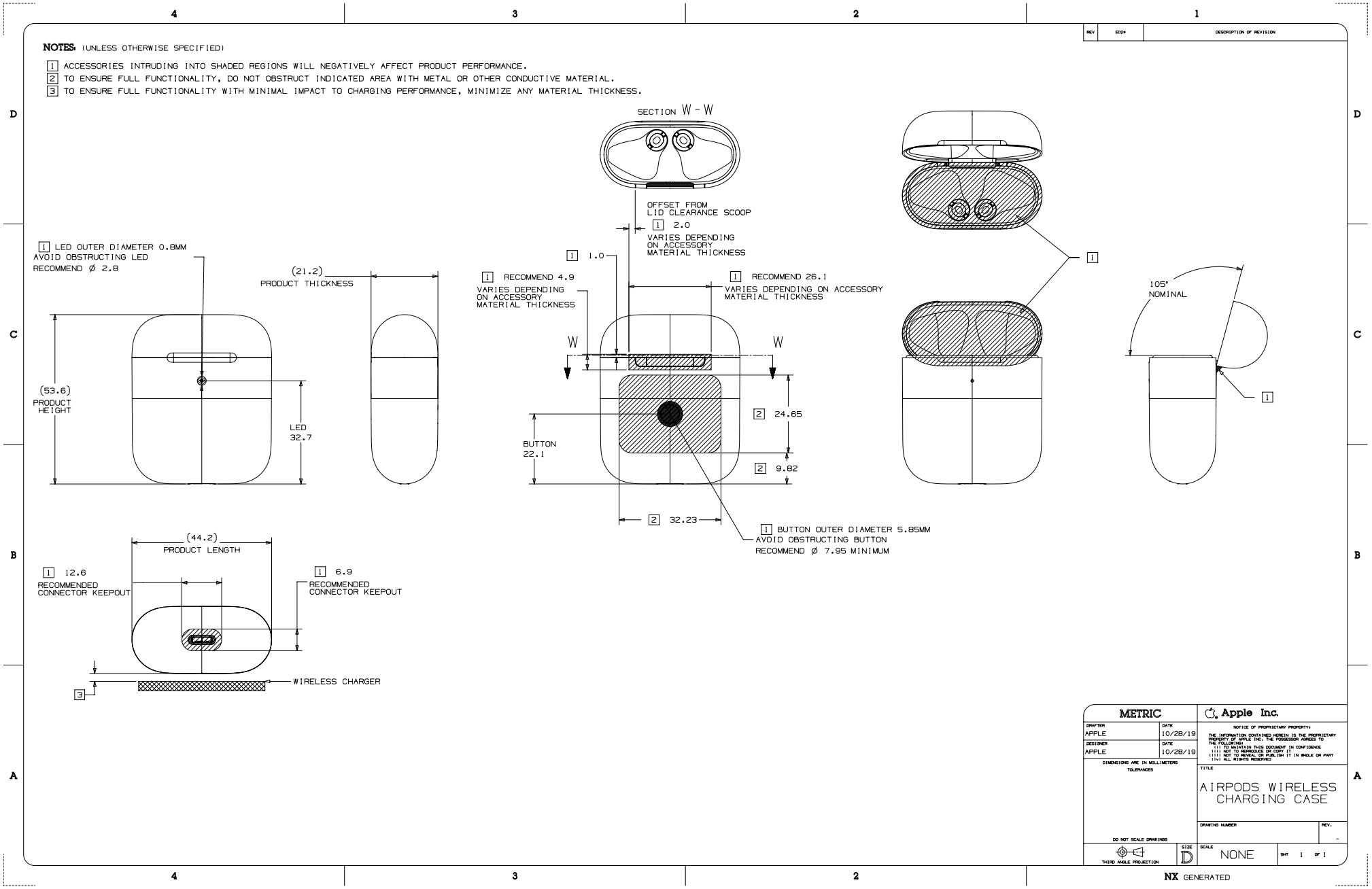

41.130 AirPods Pro

REV	ECO#	DESCRIPTION OF REVISION

NOTES: (UNLESS OTHERWISE SPECIFIED)

1. ACCESSORIES INTRUDING INTO SHADED REGIONS WILL NEGATIVELY AFFECT PRODUCT PERFORMANCE
2. ACCESSORIES MUST NOT COVER THESE METAL SURFACES

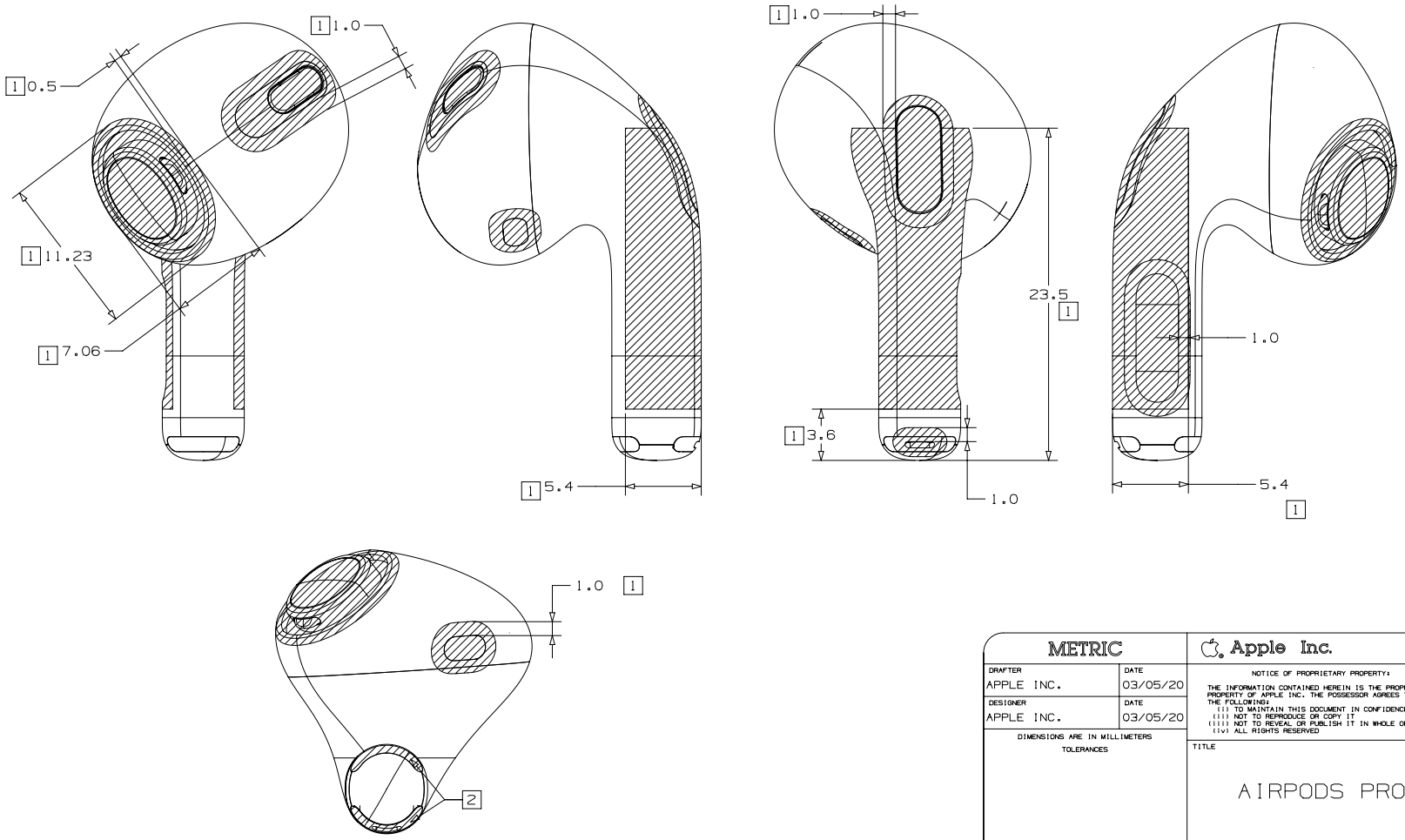

METRIC		Apple Inc.
DRAFTER APPLE INC.	DATE 03/05/20	NOTICE OF PROPRIETARY PROPERTY: THE INFORMATION CONTAINED HEREIN IS THE PROPRIETARY PROPERTY OF APPLE INC. THE POSSESSOR AGREES TO THE FOLLOWING: (i) TO MAINTAIN THIS DOCUMENT IN CONFIDENCE (ii) NOT TO REPRODUCE OR COPY IT (iii) NOT TO REVEAL OR PUBLISH IT IN WHOLE OR PART (iv) ALL RIGHTS RESERVED
DESIGNER APPLE INC.	DATE 03/05/20	
DIMENSIONS ARE IN MILLIMETERS TOLERANCES		TITLE AIRPODS PRO
DO NOT SCALE DRAWINGS		DRAWING NUMBER / REV. 01
THIRD ANGLE PROJECTION	SIZE C	SCALE NONE / SHT 1 OF 1

NX GENERATED

Copyright © 2021 Apple Inc. All Rights Reserved.

41.131 AirPods

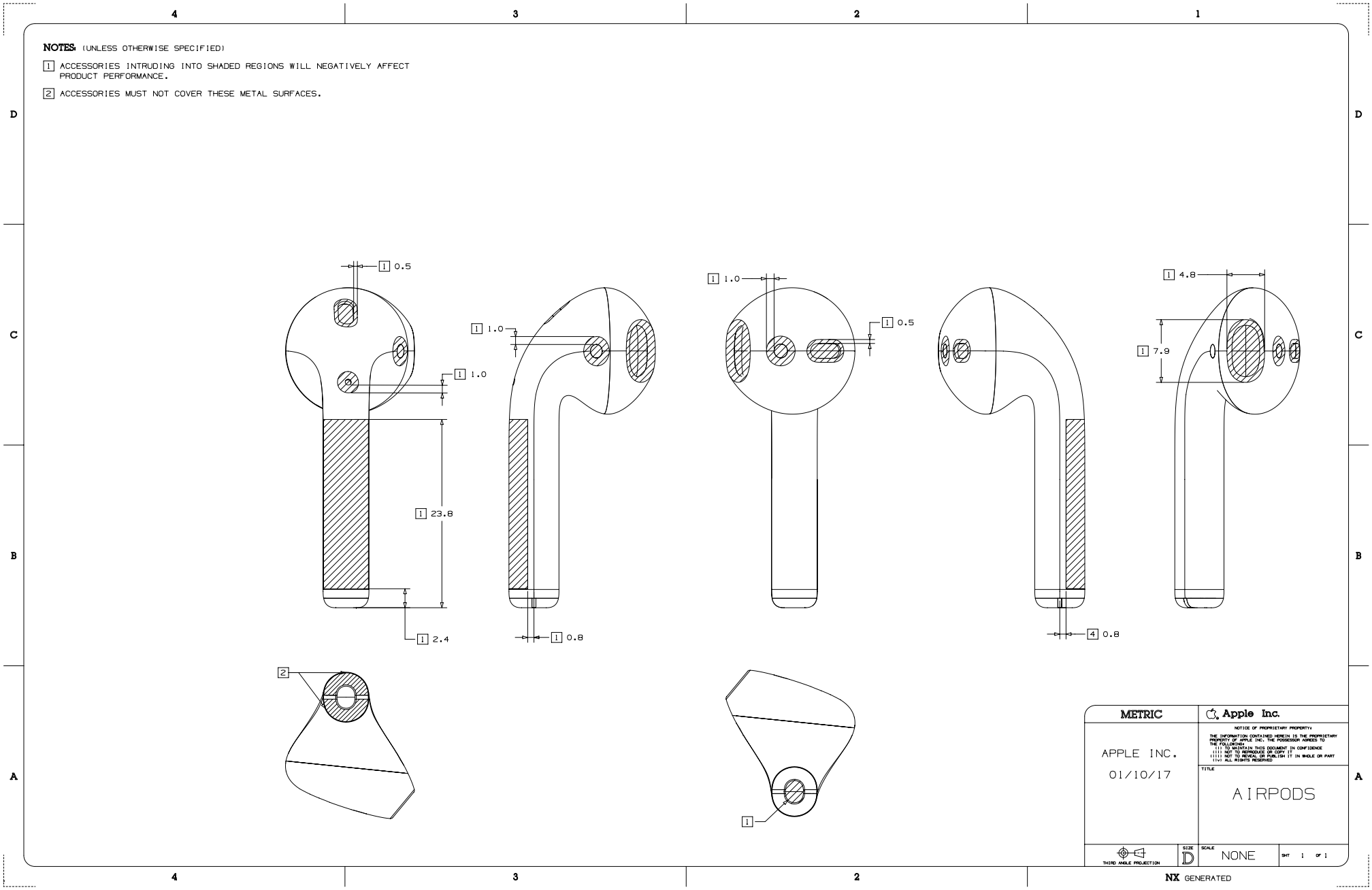

41.132 AirTag

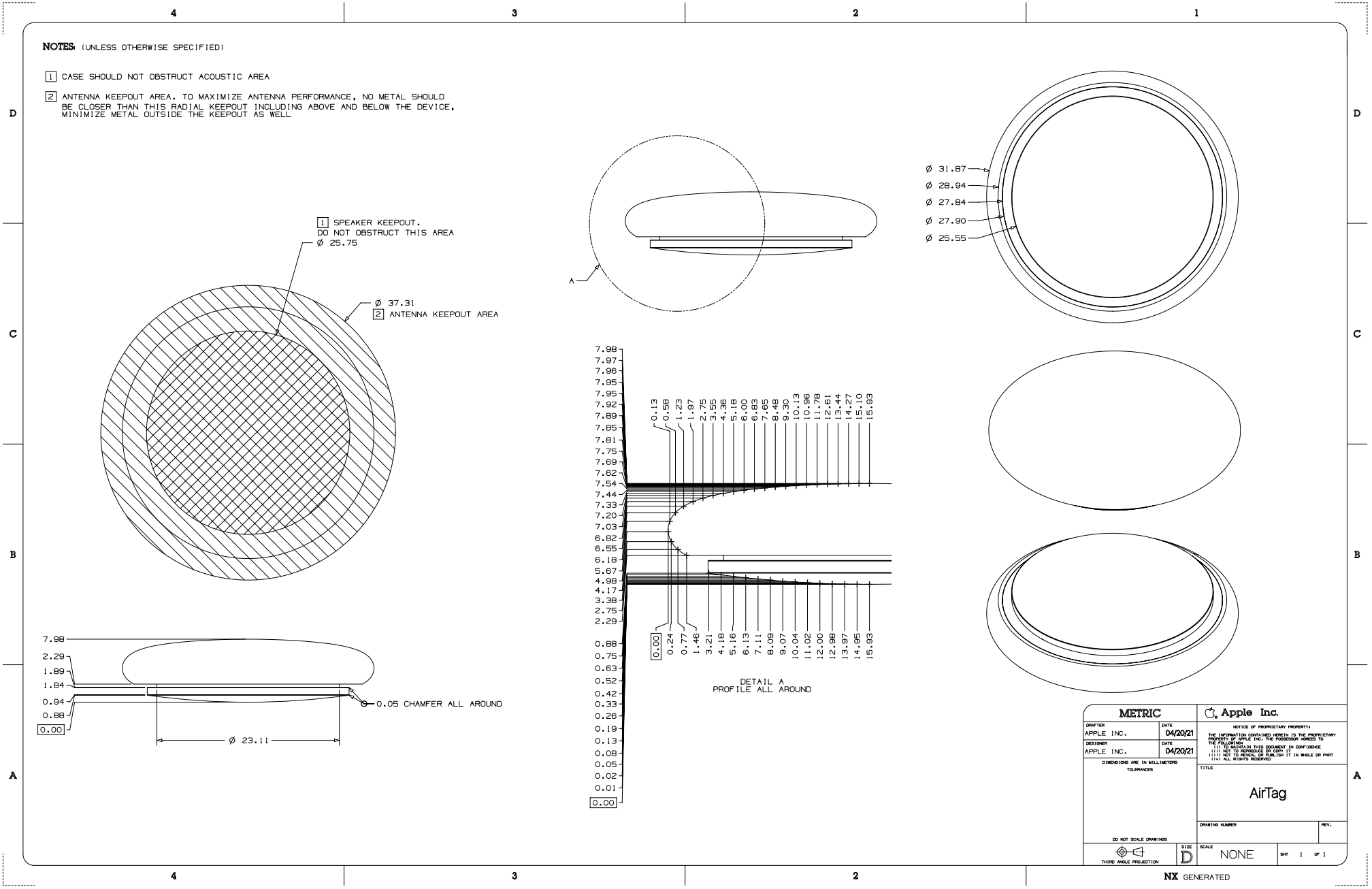

42. Revision History

This chapter describes changes to the Accessory Design Guidelines for Apple Devices from the previous revision.

Added Content

- Device Power (Inductive) (page 83)
- MagSafe Attach (page 87)
  - Magnetic Force (page 101)
  - iPhone Leather Wallet Detection (page 103)
- iPad Pro (12.9-inch) 5th Generation 1 of 5 (page 198)
- iPad Pro (12.9-inch) 5th Generation 2 of 5 (page 199)
- iPad Pro (12.9-inch) 5th Generation 3 of 5 (page 200)
- iPad Pro (12.9-inch) 5th Generation 4 of 5 (page 201)
- iPad Pro (12.9-inch) 5th Generation 5 of 5 (page 202)
- iPad Pro (11-inch) 3rd Generation 1 of 5 (page 203)
- iPad Pro (11-inch) 3rd Generation 2 of 5 (page 204)
- iPad Pro (11-inch) 3rd Generation 3 of 5 (page 205)
- iPad Pro (11-inch) 3rd Generation 4 of 5 (page 206)
- iPad Pro (11-inch) 3rd Generation 5 of 5 (page 207)
- AirTag (page 302)

Updated Content

- Edge Swipe Gestures (page 26)
- Cover Glass Contact (page 27)
- Device Models (page 35)
- Smart Covers (page 50)
- AirPods Accessories (page 62)
- Fast Charge for iPhone (20 W) (page 80)
- Qi Wireless Power (page 83)

2021-04-23 | Copyright © 2021 Apple Inc. All Rights Reserved.

Apple Inc.
Copyright © 2021 Apple Inc.
All rights reserved

Terms and Conditions ("Terms")

These Guidelines are made available to you for informational purposes only. If you make or distribute any accessory for an Apple device based on or in connection with these Guidelines ("Accessories"), you agree to the following covenants, terms and conditions:

All intellectual property rights in and to the Guidelines, and all technology described therein, are retained by Apple Inc. ("Apple"). You acknowledge and agree that Apple is not granting you, and nothing contained herein shall constitute or be construed or interpreted as a grant, by implication, estoppel or otherwise, of any license, covenant, immunity, release or right under or with respect to any intellectual property rights of Apple, including without limitation any rights to make, use, have made, sell, import, or otherwise relating in any way to any Apple device or technology described in or relating to the Guidelines.

You agree to follow Apple's Guidelines For Using Apple Trademarks and Copyrights as published on Apple's website at www.apple.com/legal/guidelinesfor3rdparties.html ("IP Guidelines") and as may be modified from time to time. You agree not to use the marks "Apple," the Apple Logo, "Mac", "iPhone," "iPod touch," "iPad," "Apple Watch," "WATCH" or any other marks belonging or licensed to Apple in any way except as expressly authorized in writing by Apple in each instance or as permitted in the IP Guidelines. You agree that all goodwill arising out of your authorized use of Apple's marks shall inure to the benefit of and belong to Apple.

You agree to indemnify, hold harmless, and, at Apple's option, defend, Apple against any claims, causes of action, losses, liabilities, damages, fines, settlements, costs, fees, and expenses (including attorney and other professional fees and expenses) arising out of: (i) your use of the Guidelines, including without limitation, any claims that any Accessory, or the combination of any Accessory with any software, technology, intellectual property, device, apparatus or assembly not supplied by Apple, infringes any patent, copyright, trade secret or other intellectual property right; (ii) the manufacture, use, promotion, distribution, sale, offer for sale, import, other distribution or exploitation or performance of any product, case, cover, band, charging stand, or other Accessory or product incorporating any Accessory, including any personal injury or product liability claims; or (iii) any failure to comply with any of the Guidelines. You will not, without Apple's prior written consent, make any admissions of liability, enter into any settlement that imposes any obligation on Apple, or publicize any settlement details relating to Apple. In addition, for any claims related to these Terms where you do not have an indemnification obligation, you shall provide all reasonable assistance to Apple and/or its counsel in connection with the defense, remedy or mitigation of such claims.

Applicable laws or regulations may impose additional restrictions or requirements on Accessories or products that incorporate the Accessories. You represent and warrant that you are in full compliance with all applicable laws, regulations, and policies in the United States and in any other location in which you engage, in whole or in part, in any activity related to the design, manufacture, marketing, sale or offer for sale, use, or other distribution of Accessories or products that incorporate the Accessories. You agree to promptly notify Apple of any complaints or threats of complaints regarding products that incorporate the Accessories with respect to any such regulatory requirements, in which case Apple may limit or terminate your ability to make, sell or purchase additional Accessories.

You expressly acknowledge and agree that access to the Guidelines is at your sole and entire risk and that you are solely responsible and liable for any harm or damage to any Apple product arising out of any breach by you of these covenants, terms and conditions. THE GUIDELINES ARE PROVIDED "AS IS" AND WITHOUT REPRESENTATION, WARRANTY, UPGRADES OR SUPPORT OF ANY KIND. APPLE AND APPLE'S DISTRIBUTORS, AFFILIATES, LICENSOR(S) AND SUPPLIER(S) ("APPLE PARTIES") EXPRESSLY DISCLAIM ALL REPRESENTATIONS, WARRANTIES AND CONDITIONS, EXPRESS OR IMPLIED, INCLUDING THE IMPLIED WARRANTIES AND CONDITIONS OF MERCHANTABILITY, OF SATISFACTORY QUALITY, OF FITNESS FOR A PARTICULAR PURPOSE, OF NON-INFRINGEMENT AND OF ACCURACY. NONE OF THE APPLE PARTIES WARRANTS THAT THE GUIDELINES OR ANY ACCESSORY WILL MEET YOUR REQUIREMENTS, THAT DEFECTS IN THEM WILL BE CORRECTED OR THAT THEY WILL BE COMPATIBLE WITH FUTURE APPLE PRODUCTS. NO ORAL OR WRITTEN INFORMATION OR ADVICE GIVEN BY ANY APPLE PARTY OR AN APPLE AUTHORIZED REPRESENTATIVE WILL CREATE A WARRANTY.

EXCEPT TO THE EXTENT SUCH A LIMITATION IS PROHIBITED BY LAW, IN NO EVENT WILL ANY APPLE PARTY BE LIABLE FOR ANY INCIDENTAL, SPECIAL, INDIRECT, CONSEQUENTIAL, EXEMPLARY OR PUNITIVE DAMAGES, INCLUDING LOST PROFITS, LOST REVENUES OR BUSINESS INTERRUPTIONS, ARISING OUT OF OR RELATING TO THE GUIDELINES UNDER A THEORY OF CONTRACT, WARRANTY, TORT (INCLUDING NEGLIGENCE), PRODUCTS LIABILITY OR OTHERWISE, EVEN IF ANY APPLE PARTY HAS BEEN ADVISED OF THE POSSIBILITY OF SUCH DAMAGES, AND NOTWITHSTANDING THE FAILURE OF ESSENTIAL PURPOSE OF ANY REMEDY. IN NO EVENT WILL THE APPLE PARTIES' TOTAL LIABILITY TO YOU FOR ALL DAMAGES AND CLAIMS UNDER OR RELATED TO THE GUIDELINES EXCEED THE AMOUNT OF US$50.00.

These Terms will be governed by and construed and enforced under the laws of the United States and the State of Delaware, except that the arbitration clause and any arbitration hereunder shall be governed by the Federal Arbitration Act, Chapters 1 and 2. The United Nations Convention on Contracts for the International Sale of Goods shall not apply to these Terms. All disputes arising out of or in connection with these Terms shall be finally settled under the Rules of Arbitration of the International Chamber of Commerce by one arbitrator appointed in accordance with such rules, and shall be conducted according to the International Bar Association Rules on the Taking of Evidence in International Arbitration. The arbitration shall take place in San Francisco, California. The arbitration shall be conducted in English. The award shall be rendered within six months of the commencement of the arbitration, unless the arbitrator determines that the interest of justice requires that such limit be extended.